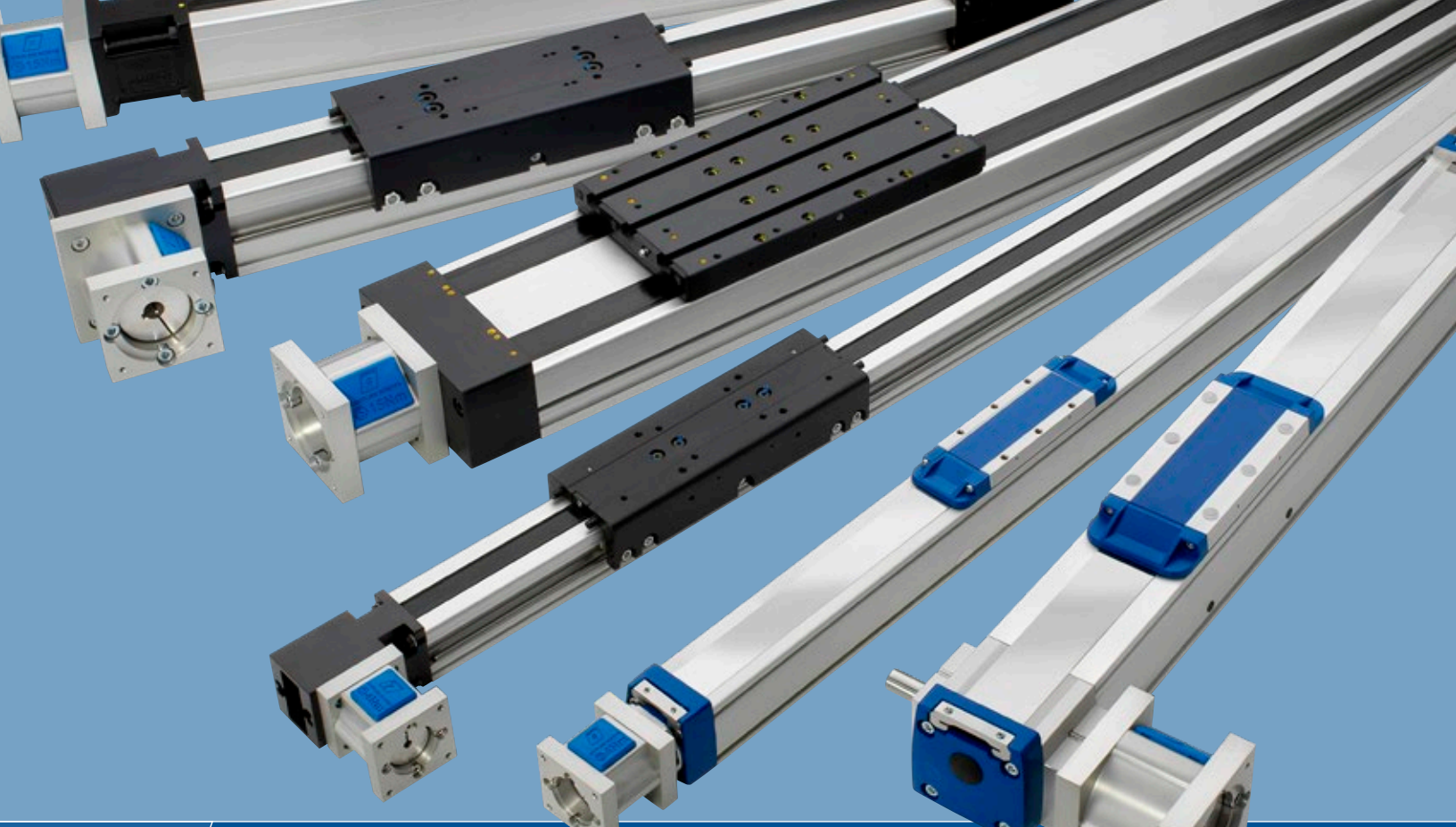

# Linear Motion Systems

THOMSON®

*Linear Motion.* ***Optimized.***™

A REGAL REXNORD BRAND

www.thomsonlinear.com

THOMSON®

*Linear Motion.* ***Optimized.***™

A REGAL REXNORD BRAND

# Thomson - the Choice for Optimized Motion Solution

Often the ideal design solution is not about finding the fastest, sturdiest, most accurate or even the least expensive option. Rather, the ideal solution is the optimal balance of performance, life and cost.

### Quickly Configure the Optimal Mechanical Motion Solution

Thomson has several advantages that makes us the supplier of choice for motion control technology.

- Thomson owns the broadest standard product offering of mechanical motion technologies in the industry.
- Modified versions of standard product or white sheet design solutions are routine for us.
- Choose Thomson and gain access to over 75 years of global application experience in industries including packaging, factory automation, material handling, medical, clean energy, printing, automotive, machine tool, aerospace and defense.

### A Name You Can Trust

A wealth of product and application information as well as 3D models, software tools, our distributor locator and global contact information is available at www.thomsonlinear.com/contact. Talk to us early in the design process to see how Thomson can help identify the optimal balance of performance, life and cost for your next application. And, call us or any of our 2000+ distribution partners around the world for fast delivery of replacement parts.

### Local Support Around the Globe

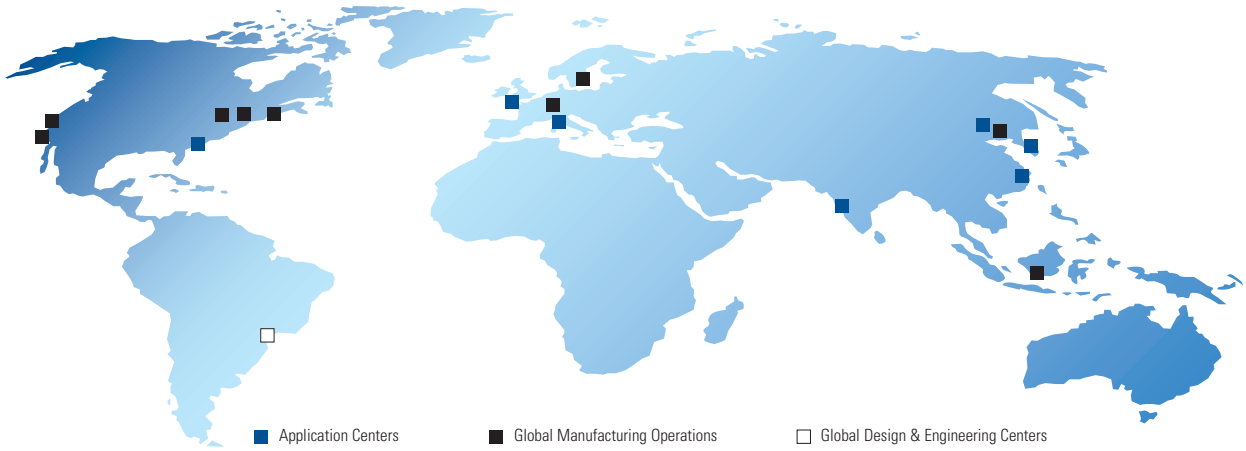

# Table of Contents

# Thomson Linear Motion Systems

## The optimal balance of performance, life and cost

Thomson has one of the most competitive and comprehensive product portfolios available today. The range covers the smallest and most compact linear motion systems to the biggest and most robust. Our wide range of guide and drive systems can be configured economically and work in harsh environments, at high speeds, and in high-precision applications.

**1969**
**Shaft Rail Assemblies** of model **1CA/1CB** released

**1981**
**Wiesel** – the world's first true **linear motion system** presented

**1982**
First generation **Movopart (M90/M140)** linear motion systems released

**1988**
Release of the **Dual Shaft Rail Assemblies (2DB/2EB)** family

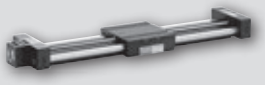

**1990**
Release of the **Twin Shaft Web (2CA/2CB)** range

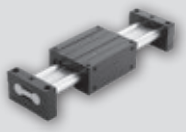

# Thomson Linear Motion Systems

## The optimal balance of performance, life and cost

Thomson has decades of innovation and application experience. A diverse offering of multiple linear motion system technologies enables Thomson to provide you with the optimal balance of performance versus installed cost for your application.

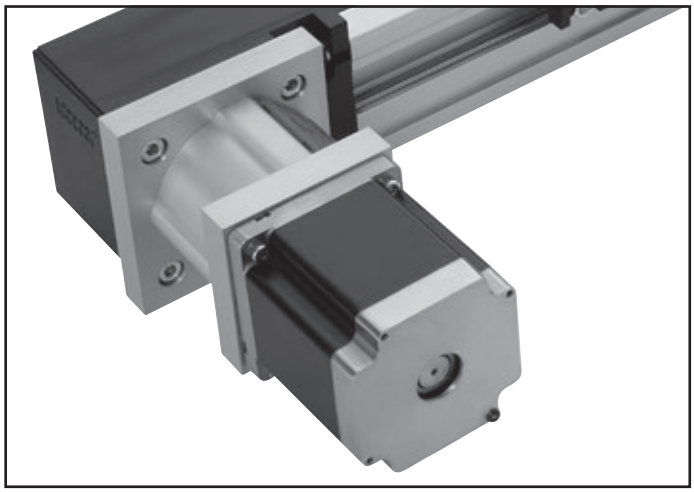

RediMount™ adapter kit as standard for quick and easy motor mounting

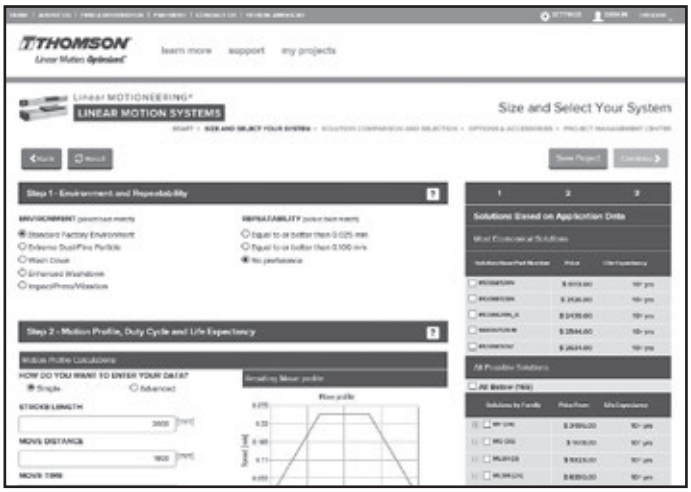


Linear Motioneering for quick and easy sizing and selection

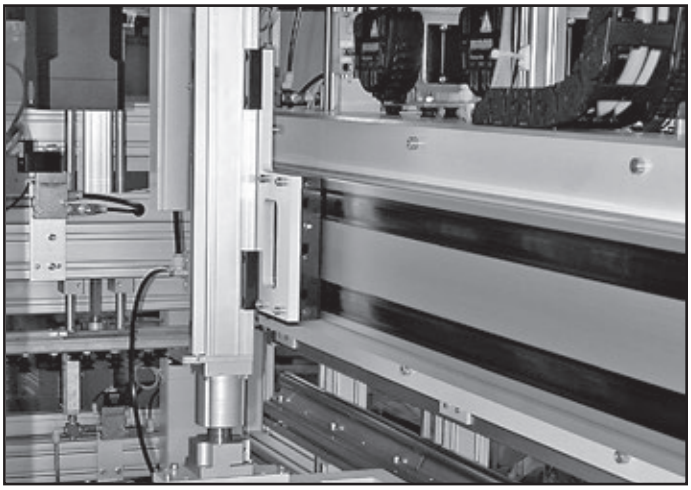

Tap into our vast application library

Thousands of successfull applications all over the world

**1995**
**Movopart M50** and the **2RB** range presented

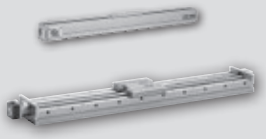

**1997**
**Movopart** generation two **(M75/M100)** and the **2HB** range released

**1998**
**Microstage** miniature style linear motion systems released

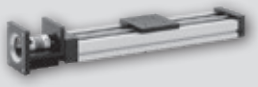

**2003**
The **MLS** range of linear motion system presented

**2018**
**RediMount™** as **standard** on all major Thomson linear motion system families

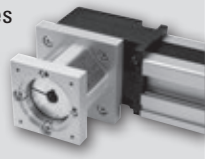

# RediMount™ Adapter Kit

## Fast, Accurate and Hassle-Free Motor Mounting

The popular and easy to use Thomson RediMount motor mounting adapter kit is now available as standard on all Thomson linear motion systems, making the whole process of choosing and mounting a motor much faster and easier.

Designed to accommodate more than 500 different motors and gearheads from a variety of manufacturers, the Thomson RediMount adapter kit eliminates the need for custom-made, intermediate flanges between your choice of linear motion system and motor or gearhead. With the optimized RediMount kit, you'll be ready to order your complete linear motion system for your application within five minutes.

A RediMount kit includes a flange and coupling to mount to your preferred motor or gearhead. The flange has been machined to exactly match the motor pilot and mounting holes, while the coupling has been bored to match the diameter of the motor shaft and the corresponding shaft key. All necessary hardware is included.

Each RediMount kit alternative is identified by a three-character code that can be designated within the overall linear motion system part number. You can configure this RediMount code as well as your entire part number on www.LinearMotioneering.com. There, you can enter your application parameters to configure a solution that provides an optimal balance of performance, life, and cost. Once you've sized your system and ordered and received your linear motion system, installation is easy.

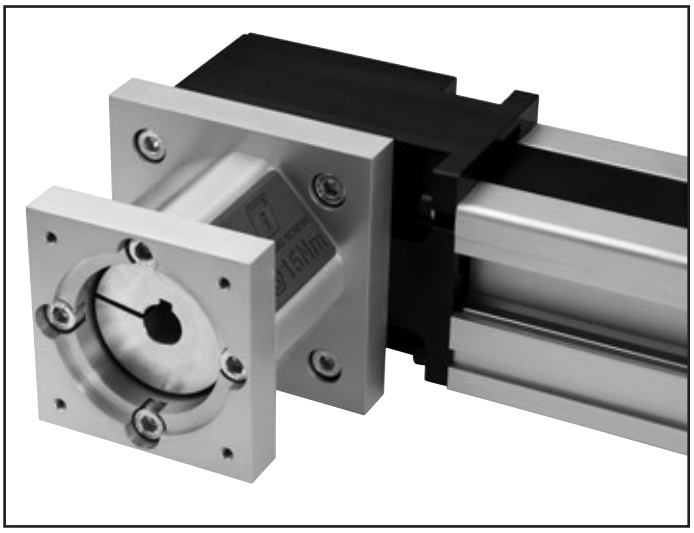

The linear motion system will arrive with the motor interface flange mounted to the unit. In a separate bag, you will find the motor coupling half, the motor bolts and the plug.

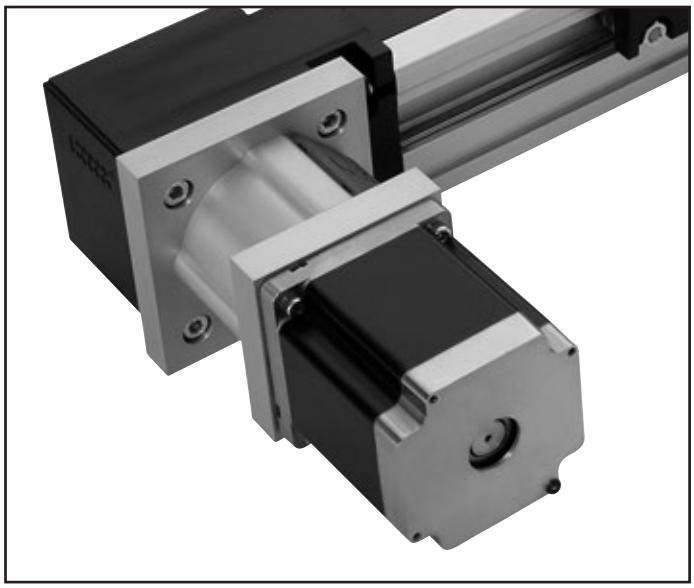

Insert the motor onto the interface flange, attach and tighten the included motor bolts, and tighten the coupling to the motor shaft. Finally, secure the plug over the coupling access window.

# Simple Product Selection with Linear Motioneering®

## Online Product Selection

The Linear Motioneering sizing and selection tool is designed to make it simple to choose the right linear motion system for your application. Simply enter the basic parameters for your application and let Linear Motioneering do all the work. Once a solution is selected, you can add accessories and options, download a CAD model, and get price and delivery time.


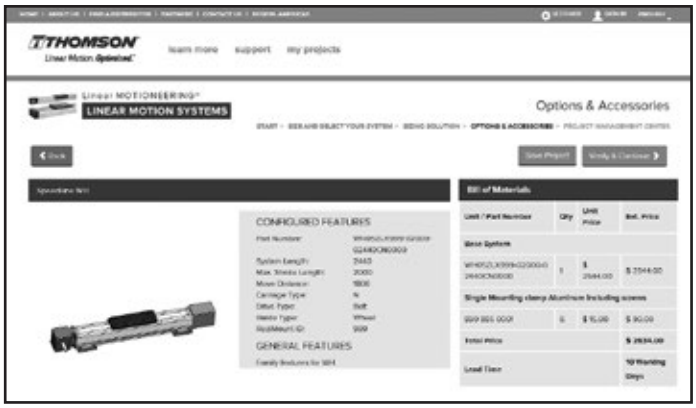


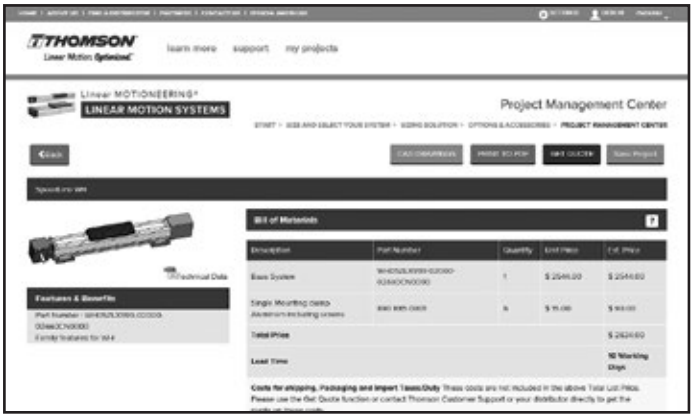


1. Visit www.LinearMotioneering.com.
2. Enter your application parameters.
3. Choose a unit from the list of solutions, optimized for your application.
4. Add options and accessories to create your bill of material, with price and lead time.
5. Request a quote. Costs for shipping, packaging and import taxes should be requested directly from Thomson Customer Support.
6. Place an order.

# Linear Motion Systems Applications

## Decades of Application Experience

Thomson has one of the broadest ranges of linear motion systems on the market. We also provide a large number of components and accessories, such as gearheads, intermediate shafts, mounting kits and sensors to help optimize a solution for your application.

**Handling and packaging**
Use linear motion systems for economical point-to-point transport motion. Speed, long stroke and/or environmental protection may be critical parameters that many times can be addressed by using Thomson linear motion systems.

**Printing and scanning**
Linear motion systems can cover the large areas, high speeds and acceleration rates at the accuracy required for this type of equipment.

**Food processing**
Fully enclosed units, also available with enhanced environmental protection, make linear motion systems suited for the often wet and humid conditions in the food industry where cleaning with high-pressure water is common.

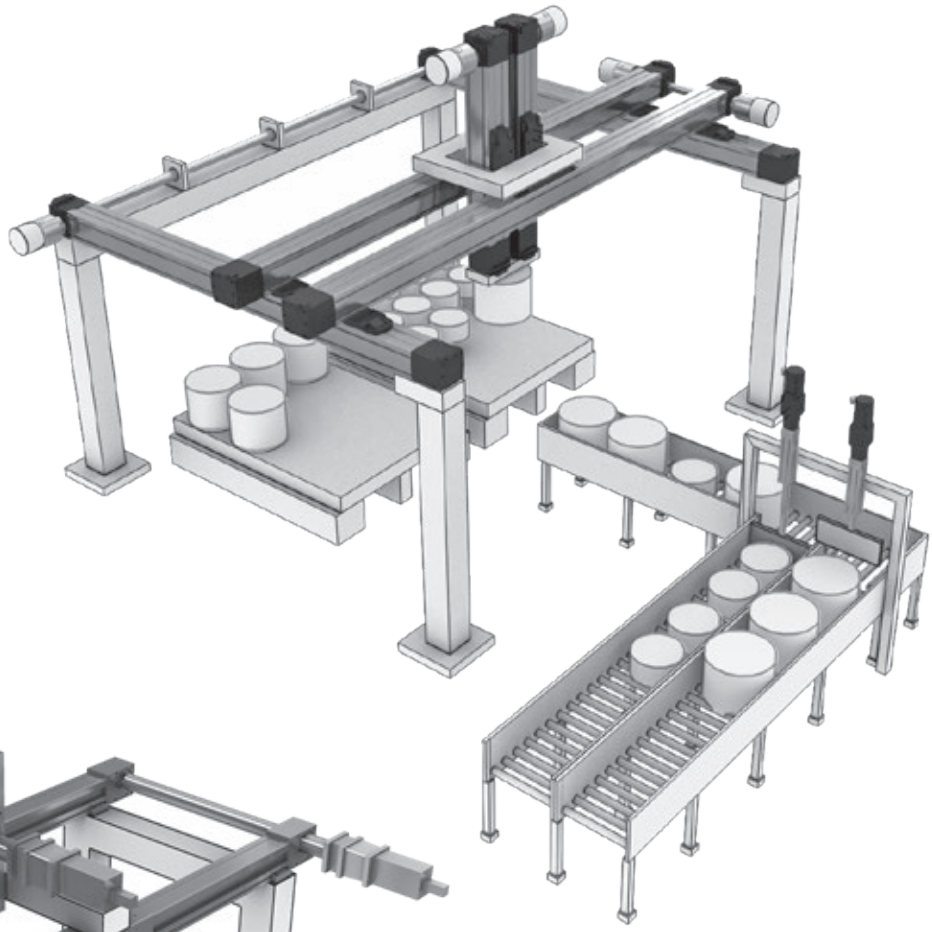

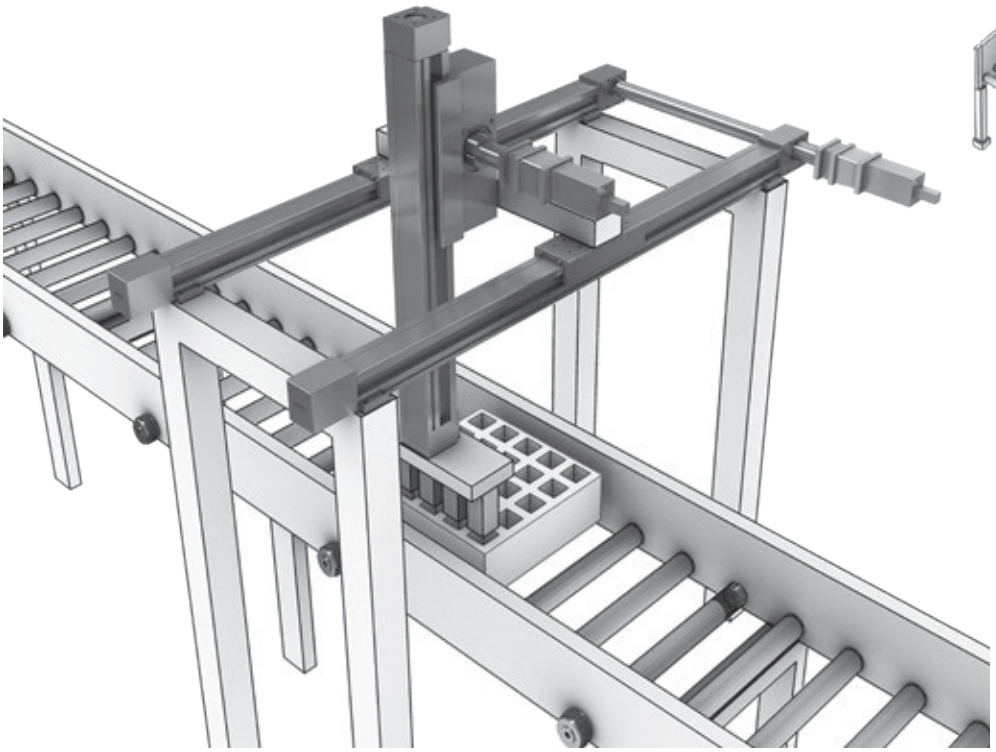

**Filling and dispensing**
Relatively short, rapid movements at high duty cycle, low load and medium accuracy are common in these types of machines. Linear motion systems are often used in these applications and especially those with belt drives.

# Linear Motion Systems Applications

## Decades of Application Experience

**Factory automation**
Factory automation is a general term for a large range of applications, and the requirements for speed, load, accuracy and other parameters vary. The variety of Thomson linear motion systems makes them a versatile and flexible building block in the design of factory automation equipment.

**Machining, test and measurement**
This type of equipment requires linear motion systems with the highest accuracy, stiffness and rigidity.

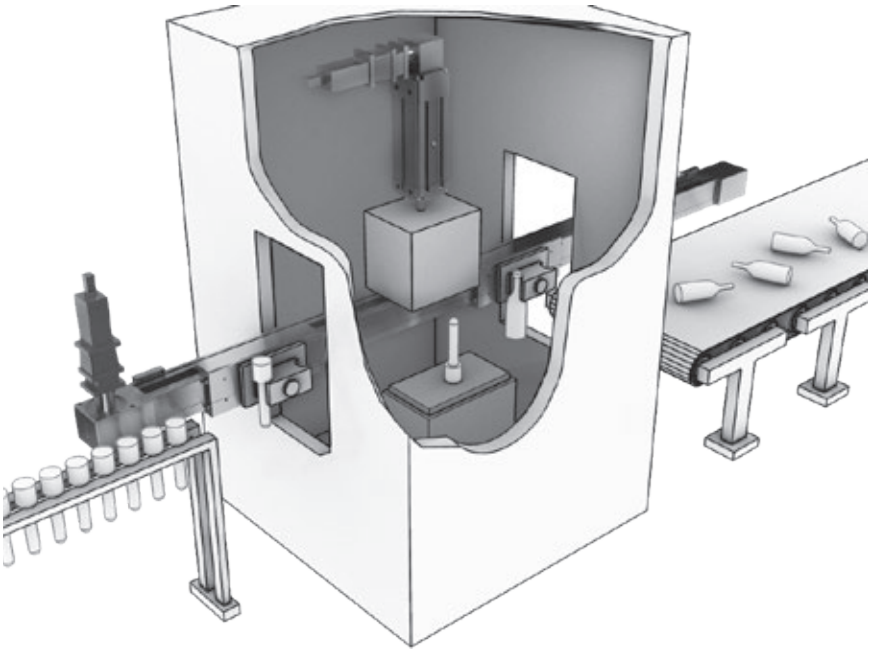

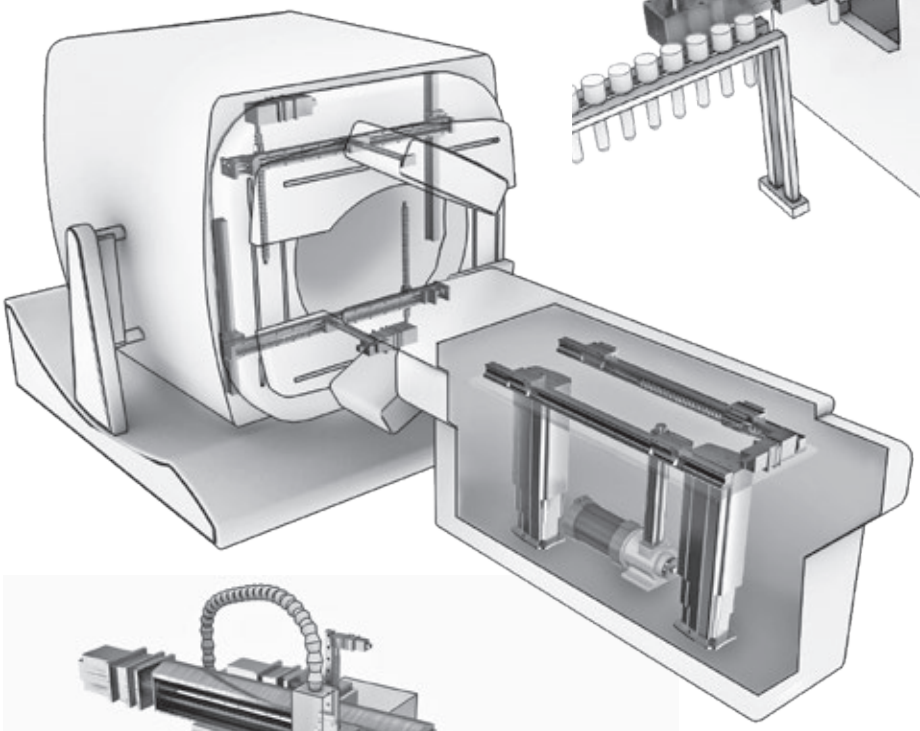

**Medical diagnostics/treatment equipment**
Given the precision of these devices, linear unit systems need to be quiet and smooth, while at the same time, able to handle high loads accurately. Reliability, safety and low maintenance are also crucial parameters in medical equipment. Thomson has successfully supplied linear motion systems to this type of equipment for many decades.

**Patient handling/ergonomic lifting devices**
You can find linear motion systems in many types of adjustable tables, lifting devices, examination equipment and different kind of manipulators.

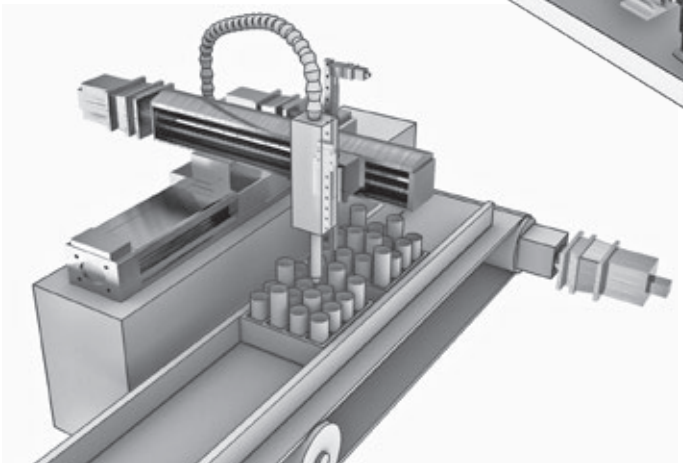

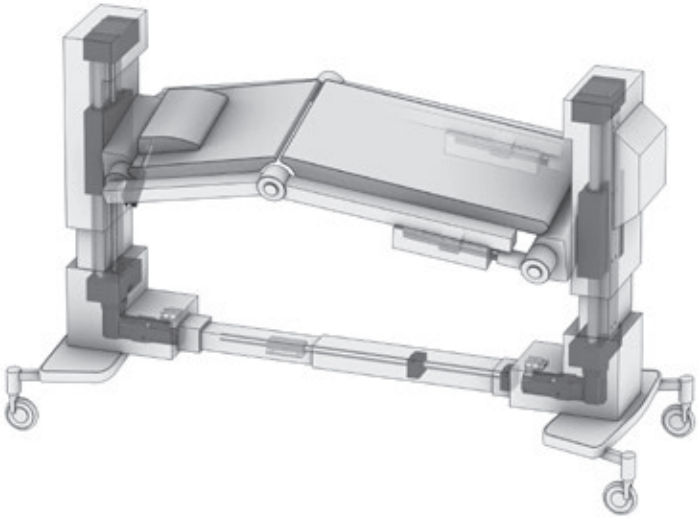

**Lab automation**
In this type of equipment, relatively light loads have to be moved short distances accurately and quickly. It is also important to keep the smallest possible footprint and not contaminate the environment. Thomson offers several linear motion systems that are well suited for these types of applications.

# Linear Motion Systems with Ball Screw Drive and Ball Guide

## Overview

### PowerLine WM

WM80

**Features**

- Can be installed in any orientation
- Patented guide system
- Patented self-adjusting plastic cover band[1]
- Patented screw support system

| Parameter | | WM40S | WM40D | WM60D | WM60S | WM60X | WM80D | WM80S | WM120D |
|---|---|---|---|---|---|---|---|---|---|
| Profile size (width × height) | [mm] | 40 × 40 | 40 × 40 | 60 × 60 | 60 × 60 | 60 × 60 | 80 × 80 | 80 × 80 | 120 × 120 |
| Stroke length (Smax), maximum | [mm] | 2000 | 1950 | 11000 | 10390 | 10340 | 11000 | 10540 | 11000 |
| Linear speed, maximum | [m/s] | 0,25 | 0,25 | 2,5 | 2,5 | 0,25 | 2,5 | 2,5 | 2,0 |
| Dynamic carriage load (Fz), maximum | [N] | 600 | 600 | 2000 | 1400 | 2000 | 3000 | 2100 | 6000 |
| Remarks | | single ball nut | double ball nuts | double ball nuts | single ball nut | left/right screw | double ball nuts | single ball nut | double ball nuts |
| Page | | 14 | 16 | 18 | 20 | 22 | 24 | 26 | 28 |

[1] Not on WM40 units

## WM-Series Technical Presentation

**Screw support**
Patented screw support system permits high speeds at long stroke lengths while reducing the available stroke with a minimum.

**Double ball nuts**
Double pre-tensioned ball nuts improve the accuracy and allow re-tensioning, increasing the lifetime of the unit.

**Central lubrication**
One central lubrication point on the carriage services the entire unit resulting in a minimum maintenance requirement.

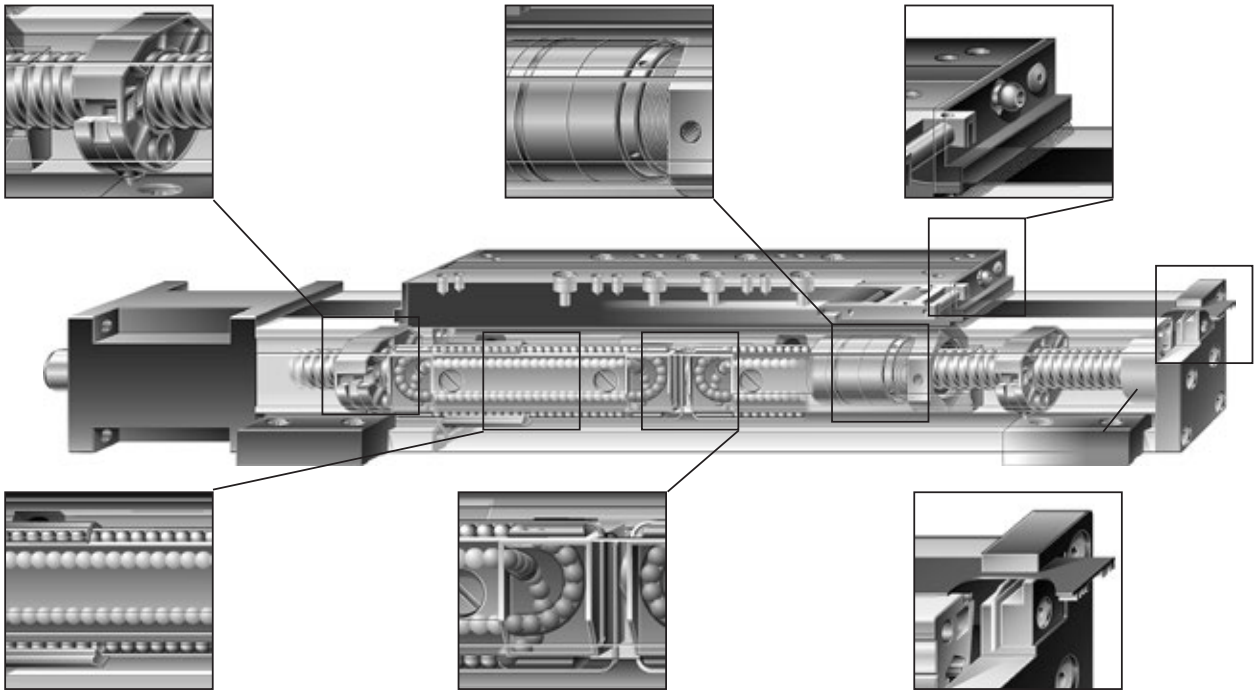

**Ball guides**
Integrated patented ball guides with hardened steel tracks for optimum performance.

**Ball cages**
The balls in the ball guides are protected by a ball cage which ensures a long life.

**Cover band**
The patented self-adjusting cover band protect the unit from the penetration of dirt, dust and liquids.

**Note! the unit is pictured without a RediMount™ flange**

# Linear Motion Systems with Lead or Ball Screw Drive and Ball Guide

## Overview

### PowerLine WV

WV80

**Features**

- Can be installed in any orientation
- Patented self-adjusting plastic cover band
- Patented screw support system
- Require external guides

| Parameter | | WV60 | WV80 | WV120 |
|---|---|---|---|---|
| Profile size (width × height) | [mm] | 60 × 60 | 80 × 80 | 120 × 120 |
| Stroke length (Smax), maximum | [mm] | 11000 | 11000 | 11000 |
| Linear speed, maximum | [m/s] | 2,5 | 2,5 | 2,0 |
| Dynamic carriage load (Fz), maximum | [N] | - | - | - |
| Remarks | | double ball nuts<br>the units has no guides | double ball nuts<br>the units has no guides | double ball nuts<br>the units has no guides |
| Page | | 30 | 32 | 34 |

### ForceLine MLSM

MLSM60D

**Features**

- Can be installed in any orientation
- Patented guide system
- Patented plastic cover band
- Patented screw support system

| Parameter | | MLSM60D | MLSM80D |
|---|---|---|---|
| Profile size (width × height) | [mm] | 160 × 65 | 240 × 85 |
| Stroke length (Smax), maximum | [mm] | 4985 | 4810 |
| Linear speed, maximum | [m/s] | 2,5 | 2,0 |
| Dynamic carriage load (Fz), maximum | [N] | 6000 | 8000 |
| Remarks | | double ball nuts | double ball nuts |
| Page | | 36 | 38 |

# Linear Motion Systems with Lead or Ball Screw Drive and Ball Guide

## Overview

### Movopart M


M75

**Features**
- Can be installed in any orientation
- Self-adjusting stainless steel cover band
- Internal ball guides
- Wash down protected versions available

| Parameter | | M55 | M75 | M100 |
|---|---|---|---|---|
| Profile size (width × height) | [mm] | 58 × 55 | 86 × 75 | 108 × 100 |
| Stroke length (Smax), maximum | [mm] | 2712 | 3772 | 5578 |
| Linear speed, maximum | [m/s] | 1,6 | 1,0 | 1,25 |
| Dynamic carriage load (Fz), maximum | [N] | 400 | 1450 | 3000 |
| Remarks | | ballscrew driven, single ball nut | ballscrew driven, single ball nut | ballscrew driven, single ball nut |
| Page | | 40 | 42 | 44 |

### 2HB


2HB20

**Features**
- Can be installed in any orientation
- High load capabilities
- Low profile height
- Preloaded ballscrew and bearing carriages offer high stiffness / rigidity
- Corrosion resistant options available.

| Parameter | | 2HB10 | 2HB20 |
|---|---|---|---|
| Profile size (width × height) | [mm] | 100 × 60 | 200 × 90 |
| Stroke length (Smax), maximum | [mm] | 1375 | 2760 |
| Linear speed, maximum | [m/s] | 0,47 | 0,95 |
| Dynamic carriage load (Fz), maximum | [N] | 8000 | 34000 |
| Remarks | | bellows or shroud options available | bellows or shroud options available |
| Page | | 46 | 48 |

### 2RB


2RB16

**Features**
- Can be installed in any orientation
- High load capabilities
- Low profile height
- Preloaded ballscrew and Super Smart bearing configuration provides stiffness / rigidity
- Corrosion resistant options available.

| Parameter | | 2RB12 | 2RB16 |
|---|---|---|---|
| Profile size (width × height) | [mm] | 130 × 40 | 160 × 48 |
| Stroke length (Smax), maximum | [mm] | 1951 | 2815 |
| Linear speed, maximum | [m/s] | 0,47 | 0,73 |
| Dynamic carriage load (Fz), maximum | [N] | 1760 | 5176 |
| Remarks | | bellows option available | bellows option available |
| Page | | 50 | 52 |

# Linear Motion Systems with Lead or Ball Screw Drive and Ball Guide

## Overview

## 2DB


**INCH INTERFACE**

**Features**

- Integrated dual-rail, webbed shaft ideal for loading in all orientations
- Low-profile height
- Super Smart bushings with low friction for smooth motion
- Easy mounting
- Corrosion resistant options available

| Parameter | | 2DB08 | 2DB12O | 2DB12J | 2DB16O | 2DB16J |
|---|---|---|---|---|---|---|
| Profile size (width × height) | [in] | 4.5 × 1.625 | 6 × 2.125 | 6 × 2.562 | 7.5 × 2.625 | 7.5 × 3.062 |
| Stroke length (Smax), maximum | [in] | 41 | 63 | 63 | 84.5 | 84.5 |
| Linear speed, maximum | [in/s] | 33.3 | 10.0 | 25.0 | 8.3 | 41.67 |
| Dynamic carriage load (Fz), maximum | [lbs] | 336 | 2115 | 2115 | 3555 | 3555 |
| Remarks | | leadscrew driven | ballscrew driven integrated carriage | ballscrew driven modular carriage | ballscrew driven integrated carriage | ballscrew driven modular carriage |
| Page | | 54 | 56 | 58 | 60 | 62 |

# WM40S

## Ball Screw Drive, Ball Guide, Single Ball Nut

» Ordering key - see page 176
» Accessories - see page 117
» Additional data - see page 172

## General Specifications

| Parameter | WM40S |
|---|---|
| Profile size (w × h) [mm] | 40 × 40 |
| Type of screw | ball screw with single nut |
| Carriage sealing system | plastic cover band |
| Screw supports | included in all units that require screw supports |
| Lubrication | central lubrication of all parts that require lubrication |
| Included accessories | 4 × mounting clamps |

## Performance Specifications

for Units with Single Standard Carriage (N)[1]

| Parameter | | WM40S |
|---|---|---|
| Stroke length (Smax), maximum | [mm] | 2000 |
| Total length (L tot), maximum | [mm] | 2300 |
| Linear speed, maximum | [m/s] | 0,25 |
| Acceleration, maximum | [m/s²] | 20 |
| Repeatability | [± mm] | 0,02 |
| Input speed, maximum | [rpm] | 3000 |
| Operation temperature limits | [°C] | 0 – 80 |
| Dynamic load (Fx), maximum | [N] | 1000 |
| Dynamic load (Fy), maximum | [N] | 450 |
| Dynamic load (Fz), maximum | [N] | 600 |
| Dynamic load torque (Mx), maximum | [Nm] | 10 |
| Dynamic load torque (My), maximum | [Nm] | 30 |
| Dynamic load torque (Mz), maximum | [Nm] | 30 |
| Drive shaft force (Frd), maximum [2] | [N] | 100 |
| Input/drive shaft torque (Mta), maximum | [Nm] | 3 |
| Ball screw diameter (d0) | [mm] | 12 |
| Ball screw lead (p) | [mm] | 5 |
| Weight | [kg] | |
| of unit with zero stroke | | 1,50 |
| of every 100 mm of stroke | | 0,30 |
| of each carriage | | 0,36 |

[1] See next page for deviating values of units with other carriage types.
[2] Only relevant for units without RediMount flange.

## Carriage Idle Torque (M idle) [Nm]

| Input speed [rpm] | Screw lead [mm] |
|---|---|
| | p = 5 |
| 150 | 0,3 |
| 1500 | 0,5 |
| 3000 | 0,8 |

M idle = the input torque needed to move the carriage with no load on it.

## Deflection of the Profile

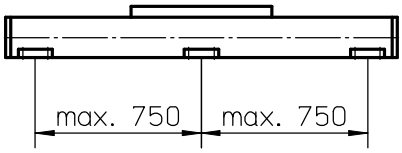


A mounting clamp must be installed at least every 750 mm to be able to operate at maximum load. Less clamps may be required if less load is being operated, see the additional technical data for more information.

## Critical Speed

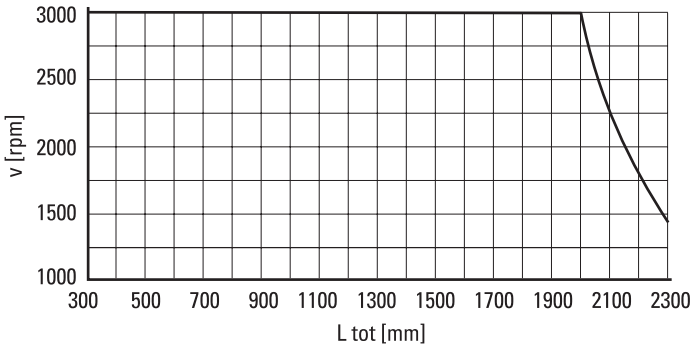


## Definition of Forces

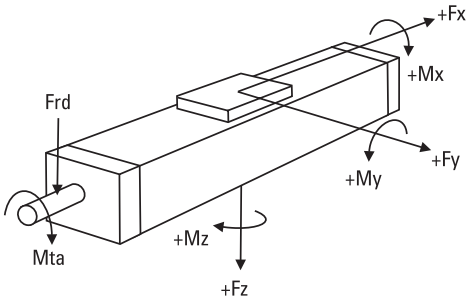

# WM40S

| Dimensions | Projection | Online Sizing & Selection! |
|---|---|---|
| METRIC | | www.LinearMotioneering.com |

## Ball Screw Drive, Ball Guide, Single Ball Nut

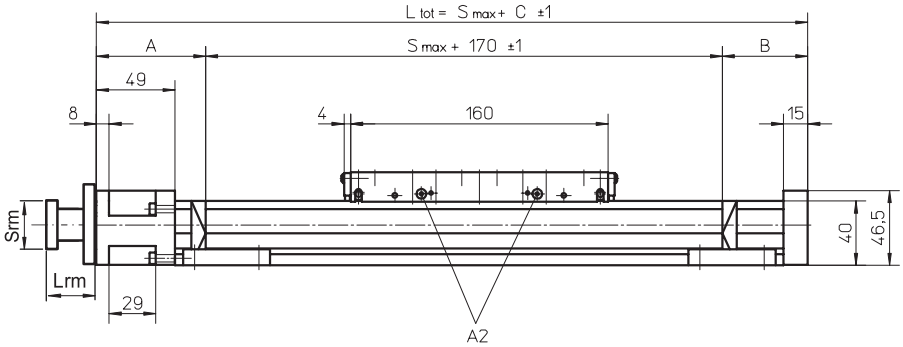


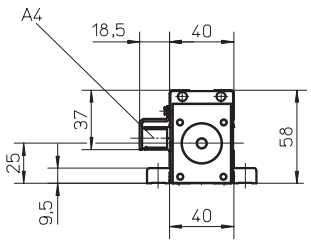


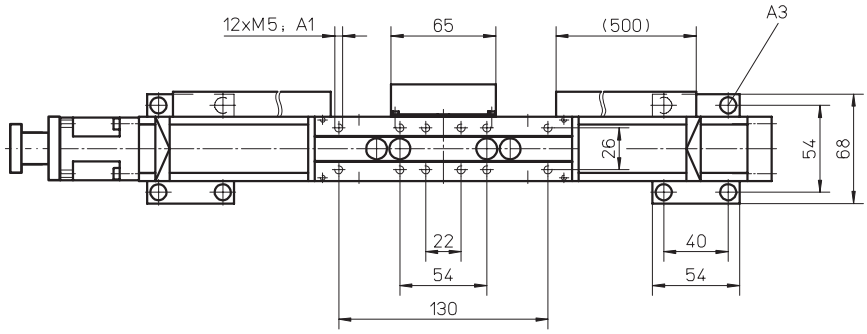


### RediMount Flange Specifications

| Parameter | | Min | Max |
|---|---|---|---|
| Flange length (Lrm) | [mm] | 59 | 94 |
| Flange square (Srm) | [mm] | 60 | 139 |
| Flange weight * | [kg] | 1,86 | |

* Max. weight including coupling and fastening screws

A1: depth 7
A2: lubricating nipple on both sides DIN3405 D 1/A
A3: socket cap screw ISO4762-M5×12 8.8
A4: ENF inductive sensor rail kit (optional - see page 150)

| Stroke length (Smax) [mm] | A [mm] | B [mm] | C [mm] |
|---|---|---|---|
| 0 – 500 | 65 | 35 | 270 |
| 501 – 1100 | 65 | 45 | 280 |
| 1101 – 2000 | 70 | 60 | 300 |

## Performance Specifications

for Units with Double Standard Carriage (Z)

| Parameter | | WM40S |
|---|---|---|
| Stroke length (Smax), maximum | [mm] | 1825 |
| Total length (L tot), maximum | [mm] | 2300 |
| Minimum distance between carriages (L c) | [mm] | 175 |
| Dynamic load (Fy), maximum | [N] | 900 |
| Dynamic load (Fz), maximum | [N] | 1200 |
| Dynamic load torque (My), maximum | [Nm] | L c[1] × 0,45 |
| Dynamic load torque (Mz), maximum | [Nm] | L c[1] × 0,6 |
| Force required to move second carriage | [N] | 4 |
| Total length (L tot) | [mm] | Smax + C + L c |

[1] Value in mm

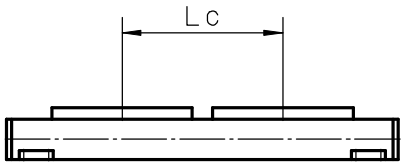

# WM40D

## Ball Screw Drive, Ball Guide, Double Ball Nuts, Long Carriage

» Ordering key - see page 176
» Accessories - see page 117
» Additional data - see page 172

## General Specifications

| Parameter | WM40D |
|---|---|
| Profile size (w × h) [mm] | 40 × 40 |
| Type of screw | ball screw with double nuts |
| Carriage sealing system | plastic cover band |
| Screw supports | included in all units that require screw supports |
| Lubrication | central lubrication of all parts that require lubrication |
| Included accessories | 4 × mounting clamps |

## Performance Specifications

for Units with Single Long Carriage (L)[1]

| Parameter | | WM40D |
|---|---|---|
| Stroke length (Smax), maximum | [mm] | 1950 |
| Total length (L tot), maximum | [mm] | 2300 |
| Linear speed, maximum | [m/s] | 0,25 |
| Acceleration, maximum | [m/s²] | 20 |
| Repeatability | [± mm] | 0,01 |
| Input speed, maximum | [rpm] | 3000 |
| Operation temperature limits | [°C] | 0 – 80 |
| Dynamic load (Fx), maximum | [N] | 1000 |
| Dynamic load (Fy), maximum | [N] | 450 |
| Dynamic load (Fz), maximum | [N] | 600 |
| Dynamic load torque (Mx), maximum | [Nm] | 10 |
| Dynamic load torque (My), maximum | [Nm] | 30 |
| Dynamic load torque (Mz), maximum | [Nm] | 30 |
| Drive shaft force (Frd), maximum [2] | [N] | 100 |
| Input/drive shaft torque (Mta), maximum | [Nm] | 3 |
| Ball screw diameter ($d_0$) | [mm] | 12 |
| Ball screw lead (p) | [mm] | 5 |
| Weight | [kg] | |
| of unit with zero stroke | | 1,90 |
| of every 100 mm of stroke | | 0,30 |
| of each carriage | | 0,60 |

[1] See next page for deviating values of units with other carriage types.
[2] Only relevant for units without RediMount flange.

## Carriage Idle Torque (M idle) [Nm]

| Input speed [rpm] | Screw lead [mm] |
|---|---|
| | p = 5 |
| 150 | 0,4 |
| 1500 | 0,6 |
| 3000 | 0,9 |

M idle = the input torque needed to move the carriage with no load on it.

## Deflection of the Profile

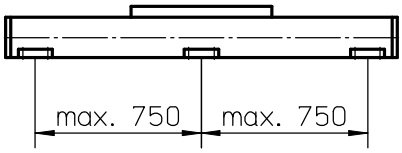


A mounting clamp must be installed at least every 750 mm to be able to operate at maximum load. Less clamps may be required if less load is being operated, see the additional technical data for more information.

## Critical Speed

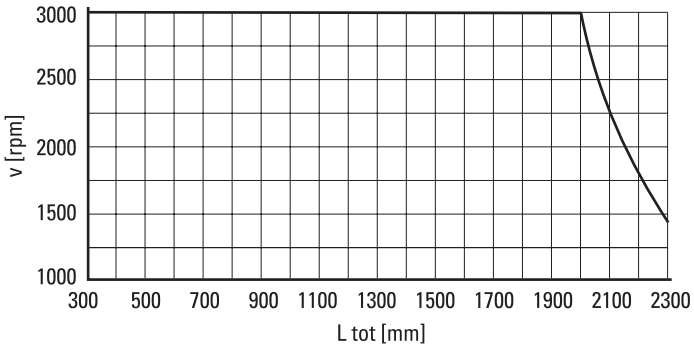


## Definition of Forces

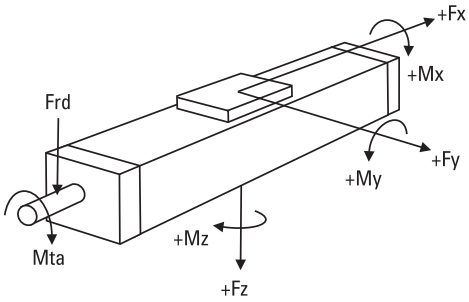

# WM40D

| Dimensions | Projection | Online Sizing & Selection! |
|---|---|---|
| METRIC | | www.LinearMotioneering.com |

## Ball Screw Drive, Ball Guide, Double Ball Nuts, Long Carriage

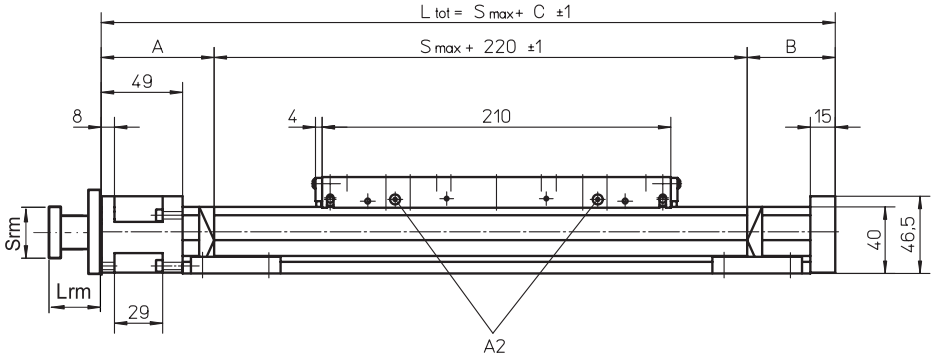


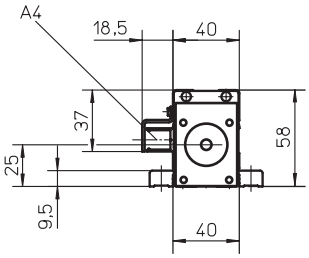


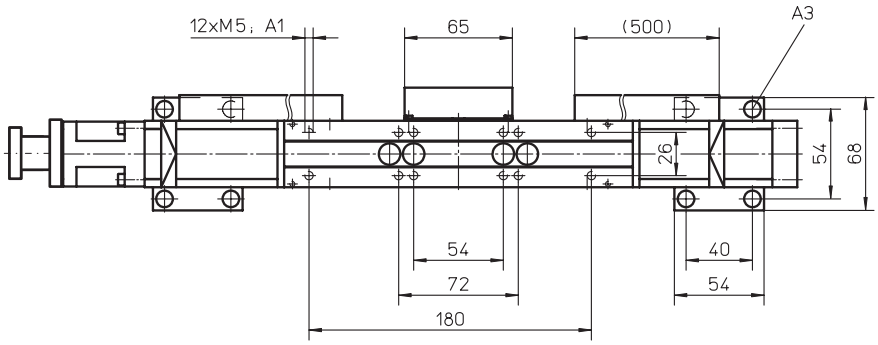


### RediMount Flange Specifications

| Parameter | | Min | Max |
|---|---|---|---|
| Flange length (Lrm) | [mm] | 59 | 94 |
| Flange square (Srm) | [mm] | 60 | 139 |
| Flange weight * | [kg] | 1,86 | |

* Max. weight including coupling and fastening screws

A1: depth 6
A2: lubricating nipple on both sides DIN3405 D 1/A
A3: socket cap screw ISO4762-M5×12 8.8
A4: ENF inductive sensor rail kit (optional - see page 150)

| Stroke length (Smax) [mm] | A [mm] | B [mm] | C [mm] |
|---|---|---|---|
| 0 – 450 | 65 | 35 | 320 |
| 451 – 1050 | 65 | 45 | 330 |
| 1051 – 1950 | 70 | 60 | 350 |

## Performance Specifications
for Units with Double Long Carriage (M)

| Parameter | | WM40D |
|---|---|---|
| Stroke length (Smax), maximum | [mm] | 1725 |
| Total length (L tot), maximum | [mm] | 2300 |
| Minimum distance between carriages (Lc) | [mm] | 225 |
| Dynamic load (Fy), maximum | [N] | 900 |
| Dynamic load (Fz), maximum | [N] | 1200 |
| Dynamic load torque (My), maximum | [Nm] | L c[1] × 0,45 |
| Dynamic load torque (Mz), maximum | [Nm] | L c[1] × 0,6 |
| Force required to move second carriage | [N] | 4 |
| Total length (L tot) | [mm] | Smax + C + Lc |

[1] Value in mm

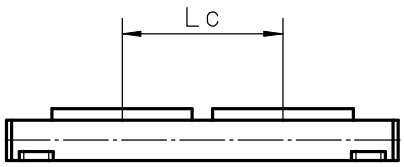

# WM60D

## Ball Screw Drive, Ball Guide, Double Ball Nuts

» Ordering key - see page 176
» Accessories - see page 117
» Additional data - see page 172

## General Specifications

| Parameter | WM60D |
|---|---|
| Profile size (w × h) [mm] | 60 × 60 |
| Type of screw | ball screw with double nut |
| Carriage sealing system | self-adjusting plastic cover band |
| Screw supports | included in all units that require screw supports |
| Lubrication | central lubrication of all parts that require lubrication |
| Included accessories | 4 × mounting clamps |

## Performance Specifications

for Units with Single Standard Carriage (N)[1]

| Parameter | | WM60D |
|---|---|---|
| Stroke length (Smax), maximum<br>screw lead 5, 20 mm<br>screw lead 50 mm | [mm] | <br>11000<br>5000 |
| Total length (L tot), maximum<br>screw lead 5, 20 mm<br>screw lead 50 mm | [mm] | <br>12130<br>5780 |
| Linear speed, maximum | [m/s] | 2,5 |
| Acceleration, maximum | [m/s²] | 20 |
| Repeatability | [± mm] | 0,01 |
| Input speed, maximum | [rpm] | 3000 |
| Operation temperature limits | [°C] | 0 – 80 |
| Dynamic load (Fx), maximum | [N] | 4000 |
| Dynamic load (Fy), maximum | [N] | 2000 |
| Dynamic load (Fz), maximum | [N] | 2000 |
| Dynamic load torque (Mx), maximum | [Nm] | 100 |
| Dynamic load torque (My), maximum | [Nm] | 200 |
| Dynamic load torque (Mz), maximum | [Nm] | 200 |
| Drive shaft force (Frd), maximum [2] | [N] | 500 |
| Input/drive shaft torque (Mta), maximum | [Nm] | 35 |
| Ball screw diameter (d0) | [mm] | 20 |
| Ball screw lead (p) | [mm] | 5, 20, 50 |
| Weight<br>of unit with zero stroke<br>of every 100 mm of stroke<br>of each carriage | [kg] | <br>6,16<br>0,65<br>1,99 |

[1] See next page for deviating values of units with other carriage types.
[2] Only relevant for units without RediMount flange.

## Carriage Idle Torque (M idle) [Nm]

| Input speed [rpm] | Screw lead [mm] | | |
|---|---|---|---|
| | p = 5 | p = 20 | p = 50 |
| 150 | 0,8 | 1,3 | 1,6 |
| 1500 | 1,4 | 2,0 | 2,4 |
| 3000 | 1,8 | 2,3 | 2,6 |

M idle = the input torque needed to move the carriage with no load on it.

## Deflection of the Profile

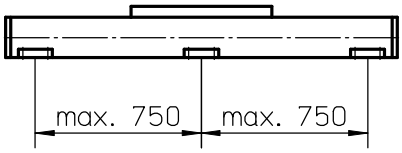


A mounting clamp must be installed at least every 750 mm to be able to operate at maximum load. Less clamps may be required if less load is being operated, see the additional technical data for more information. Units with a profile length over 6300 mm consist of two profiles where the joint between the two profiles must be adequately supported on both sides.

## Definition of Forces

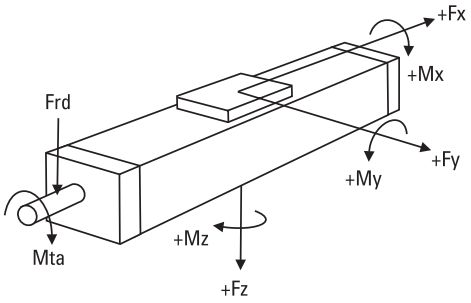

# WM60D

| Dimensions | Projection | Online Sizing & Selection! |
|---|---|---|
| METRIC | | www.LinearMotioneering.com |

## Ball Screw Drive, Ball Guide, Double Ball Nuts

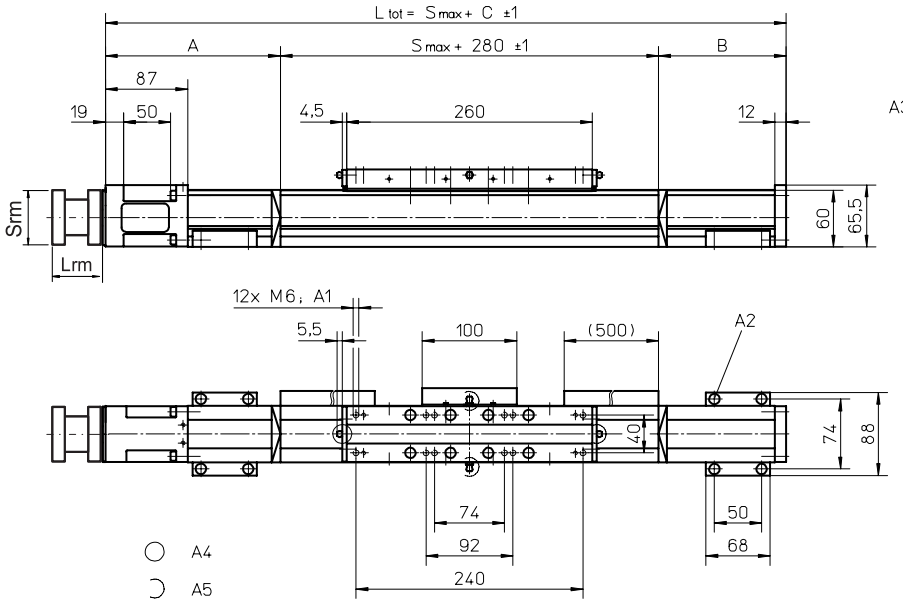


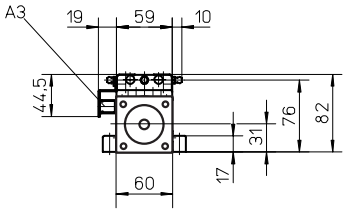


| RediMount Flange Specifications | | | |
|---|---|---|---|
| **Parameter** | | **Min** | **Max** |
| Flange length (Lrm) | [mm] | 83 | 145 |
| Flange square (Srm) | [mm] | 90 | 200 |
| Flange weight * | [kg] | 5,64 | |

* Max. weight including coupling and fastening screws

A1: depth 11
A2: socket cap screw ISO4762-M6×20 8.8
A3: ENF inductive sensor rail kit (optional - see page 150)
A4: tapered lubricating nipple to DIN71412 AM6 on fixed-bearing side as standard feature
A5: can be changed over to one of the three alternative lubricating points by the customer

| Stroke length (Smax) [mm] | A [mm] | B [mm] | C [mm] |
|---|---|---|---|
| 0 - 695 (0 - 505) | 115 | 65 | 460 (650) |
| 696 - 1335 (506 - 1145) | 165 | 115 | 560 (750) |
| 1336 - 2075 (1146 - 1885) | 185 | 135 | 600 (790) |
| 2076 - 2780 (1886 - 2590) | 210 | 160 | 650 (840) |

Values between brackets = for units with long carriage

| Stroke length (Smax) [mm] | A [mm] | B [mm] | C [mm] |
|---|---|---|---|
| 2781 - 3545 (2591 - 3355) | 230 | 180 | 690 (880) |
| 3546 - 4285 (3366 - 4095) | 250 | 200 | 730 (920) |
| 4286 - 5015 (4096 - 4825) | 275 | 225 | 780 (970) |
| 5016 - 11000 (4826 - 10810) | contact customer service | | |

## Performance Specifications
for Units with Single Long Carriage (L)

| Parameter | | WM60D |
|---|---|---|
| Stroke length (Smax), maximum | [mm] | |
| screw lead 5, 20 mm | | 11000 |
| screw lead 50 mm | | 4810 |
| Total length (L tot), maximum | [mm] | |
| screw lead 5, 20 mm | | 12320 |
| screw lead 50 mm | | 5780 |
| Carriage length | [mm] | 450 |
| Dynamic load torque (My), maximum | [Nm] | 500 |
| Dynamic load torque (Mz), maximum | [Nm] | 500 |
| Weight | [kg] | 3,1 |

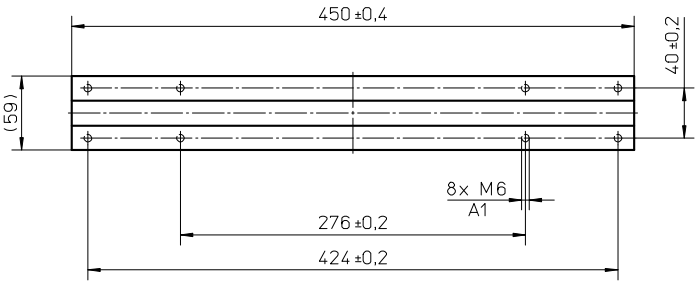


A1: depth 11

## Performance Specifications
for Units with Double Standard Carriage (Z)

| Parameter | | WM60D |
|---|---|---|
| Stroke length (Smax), maximum | [mm] | |
| screw lead 5, 20 mm | | 10665 |
| screw lead 50 mm | | 4665 |
| Total length (L tot), maximum | [mm] | |
| screw lead 5, 20 mm | | 12130 |
| screw lead 50 mm | | 5780 |
| Minimum distance between carriages (Lc) | [mm] | 335 |
| Dynamic load (Fy), maximum | [N] | 4000 |
| Dynamic load (Fz), maximum | [N] | 4000 |
| Dynamic load torque (My), maximum | [Nm] | L c[1] × 2 |
| Dynamic load torque (Mz), maximum | [Nm] | L c[1] × 2 |
| Force required to move second carriage | [N] | 20 |
| Total length (L tot) | [mm] | Smax + C + Lc |

[1] Value in mm

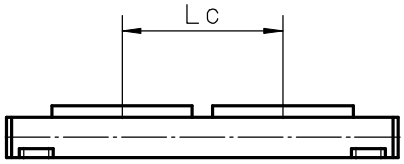

# WM60S

## Ball Screw Drive, Ball Guide, Single Ball Nut, Short Carriage

» Ordering key - see page 176
» Accessories - see page 117
» Additional data - see page 172

## General Specifications

| Parameter | WM60S |
|---|---|
| Profile size (w × h) [mm] | 60 × 60 |
| Type of screw | ball screw with single nut |
| Carriage sealing system | self-adjusting plastic cover band |
| Screw supports | included in all units that require screw supports |
| Lubrication | central lubrication of all parts that require lubrication |
| Included accessories | 4 × mounting clamps |

## Performance Specifications

for Units with Single Short Carriage (S)[1]

| Parameter | | WM60S |
|---|---|---|
| Stroke length (Smax), maximum<br>screw lead 5, 20 mm<br>screw lead 50 mm | [mm] | <br>10390<br>5000 |
| Total length (L tot), maximum<br>screw lead 5, 20 mm<br>screw lead 50 mm | [mm] | <br>11400<br>5650 |
| Linear speed, maximum | [m/s] | 2,5 |
| Acceleration, maximum | [m/s²] | 10 |
| Repeatability | [± mm] | 0,02 |
| Input speed, maximum | [rpm] | 3000 |
| Operation temperature limits | [°C] | 0 – 80 |
| Dynamic load (Fx), maximum | [N] | 2800 |
| Dynamic load (Fy), maximum | [N] | 1400 |
| Dynamic load (Fz), maximum | [N] | 1400 |
| Dynamic load torque (Mx), maximum | [Nm] | 50 |
| Dynamic load torque (My), maximum | [Nm] | 100 |
| Dynamic load torque (Mz), maximum | [Nm] | 100 |
| Drive shaft force (Frd), maximum [2] | [N] | 500 |
| Input/drive shaft torque (Mta), maximum | [Nm] | 35 |
| Ball screw diameter ($d_0$) | [mm] | 20 |
| Ball screw lead (p) | [mm] | 5, 20, 50 |
| Weight<br>of unit with zero stroke<br>of every 100 mm of stroke<br>of each carriage | [kg] | <br>3,80<br>0,65<br>1,00 |

[1] See next page for deviating values of units with other carriage types.
[2] Only relevant for units without RediMount flange.

## Carriage Idle Torque (M idle) [Nm]

| Input speed [rpm] | Screw lead [mm] | | |
|---|---|---|---|
| | p = 5 | p = 20 | p = 50 |
| 150 | 0,7 | 1,0 | 1,4 |
| 1500 | 1,1 | 1,6 | 2,0 |
| 3000 | 1,5 | 1,8 | 2,2 |

M idle = the input torque needed to move the carriage with no load on it.

## Deflection of the Profile

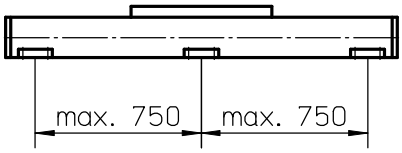


A mounting clamp must be installed at least every 750 mm to be able to operate at maximum load. Less clamps may be required if less load is being operated, see the additional technical data for more information. Units with a profile length over 6300 mm consist of two profiles where the joint between the two profiles must be adequately supported on both sides.

## Definition of Forces

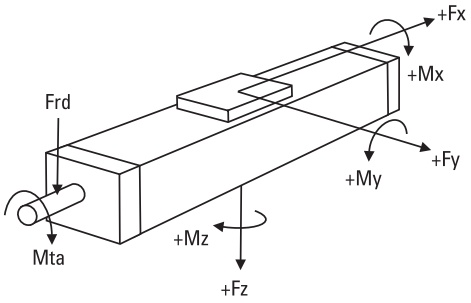

# WM60S

| Dimensions | Projection | Online Sizing & Selection! |
|---|---|---|
| METRIC | | www.LinearMotioneering.com |

## Ball Screw Drive, Ball Guide, Single Ball Nut, Short Carriage

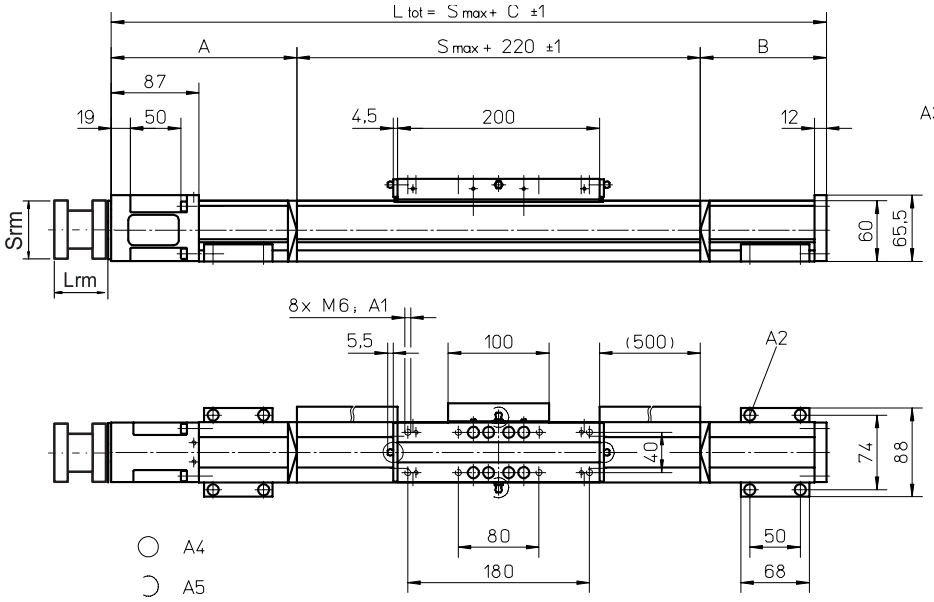


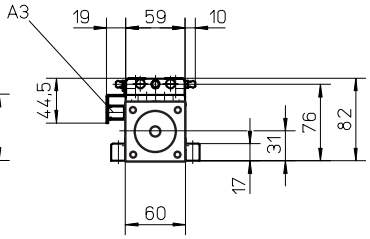


### RediMount Flange Specifications

| Parameter | | Min | Max |
|---|---|---|---|
| Flange length (Lrm) | [mm] | 83 | 145 |
| Flange square (Srm) | [mm] | 90 | 200 |
| Flange weight * | [kg] | 5,64 | |

* Max. weight including coupling and fastening screws

A1: depth 11
A2: socket cap screw ISO4762-M6×20 8.8
A3: ENF inductive sensor rail kit (optional - see page 150)

A4: tapered lubricating nipple to DIN71412 AM6 on fixed-bearing side as standard feature
A5: can be changed over to one of the three alternative lubricating points by the customer

| Stroke length (Smax) [mm] | A [mm] | B [mm] | C [mm] |
|---|---|---|---|
| 0 - 580 | 95 | 20 | 335 |
| 581 - 1140 | 110 | 60 | 390 |
| 1141 - 1805 | 130 | 80 | 430 |
| 1806 - 2460 | 155 | 105 | 480 |

| Stroke length (Smax) [mm] | A [mm] | B [mm] | C [mm] |
|---|---|---|---|
| 2461 - 3125 | 175 | 125 | 520 |
| 3126 - 3780 | 200 | 150 | 570 |
| 3781 - 4445 | 220 | 170 | 610 |
| 4446 - 5000 | 240 | 190 | 650 |
| 5001 - 10390 | contact customer service | | |

## Performance Specifications
for Units with Double Short Carriage (Y)

| Parameter | | WM60S |
|---|---|---|
| Stroke length (Smax), maximum<br>screw lead 5, 20 mm<br>screw lead 50 mm | [mm] | <br>10135<br>4745 |
| Total length (L tot), maximum<br>screw lead 5, 20 mm<br>screw lead 50 mm | [mm] | <br>11400<br>5650 |
| Minimum distance between carriages (Lc) | [mm] | 255 |
| Dynamic load (Fy), maximum | [N] | 2800 |
| Dynamic load (Fz), maximum | [N] | 2800 |
| Dynamic load torque (My), maximum | [Nm] | L c[1] × 1,4 |
| Dynamic load torque (Mz), maximum | [Nm] | L c[1] × 1,4 |
| Force required to move second carriage | [N] | 18 |
| Total length (L tot) | [mm] | Smax + C + Lc |

[1] Value in mm

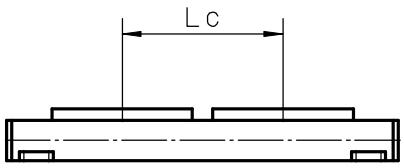

# WM60X

## Ball Screw Drive, Ball Guide, Left/Right Moving Carriages

» Ordering key - see page 176
» Accessories - see page 117
» Additional data - see page 172

## General Specifications

| Parameter | WM60X |
|---|---|
| Profile size (w × h) [mm] | 60 × 60 |
| Type of screw | ball screw with double nut |
| Carriage sealing system | self-adjusting plastic cover band |
| Screw supports | included in all units that require screw supports |
| Lubrication | central lubrication of all parts that require lubrication |
| Included accessories | 4 × mounting clamps |

## Performance Specifications

for Units with Single Standard Carriage (N)[1]

| Parameter | | WM60X |
|---|---|---|
| Stroke length (Smax), maximum | [mm] | 10340 |
| Linear speed, maximum | [m/s] | 0,25 |
| Acceleration, maximum | [m/s²] | 20 |
| Repeatability | [± mm] | 0,01 |
| Input speed, maximum | [rpm] | 3000 |
| Operation temperature limits | [°C] | 0 – 80 |
| Dynamic load (Fx), maximum | [N] | 4000 |
| Dynamic load (Fy), maximum | [N] | 2000 |
| Dynamic load (Fz), maximum | [N] | 2000 |
| Dynamic load torque (Mx), maximum | [Nm] | 100 |
| Dynamic load torque (My), maximum | [Nm] | 200 |
| Dynamic load torque (Mz), maximum | [Nm] | 200 |
| Drive shaft force (Frd), maximum [2] | [N] | 500 |
| Input/drive shaft torque (Mta), maximum | [Nm] | 35 |
| Ball screw diameter ($d_0$) | [mm] | 20 |
| Ball screw lead (p) | [mm] | 5 |
| Weight | [kg] | |
| of unit with zero stroke | | 10,33 |
| of every 100 mm of stroke | | 0,65 |
| of each carriage | | 1,99 |

[1] See next page for deviating values of units with other carriage types.
[2] Only relevant for units without RediMount flange.

## Carriage Idle Torque (M idle) [Nm]

| Input speed [rpm] | Screw lead [mm] |
|---|---|
| | p = 5 |
| 150 | 1,6 |
| 1500 | 2,8 |
| 3000 | 3,6 |

M idle = the input torque needed to move the carriage with no load on it.

## Deflection of the Profile

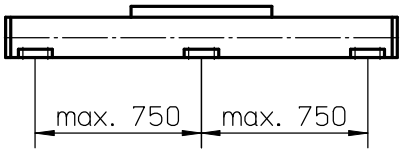


A mounting clamp must be installed at least every 750 mm to be able to operate at maximum load. Less clamps may be required if less load is being operated, see the additional technical data for more information. Units with a profile length over 6300 mm consist of two profiles where the joint between the two profiles must be adequately supported on both sides.

## Definition of Forces

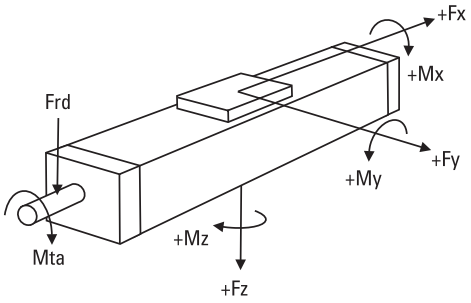

# WM60X

| Dimensions | Projection | Online Sizing & Selection! |
|---|---|---|
| METRIC | | www.LinearMotioneering.com |

## Ball Screw Drive, Ball Guide, Left/Right Moving Carriages

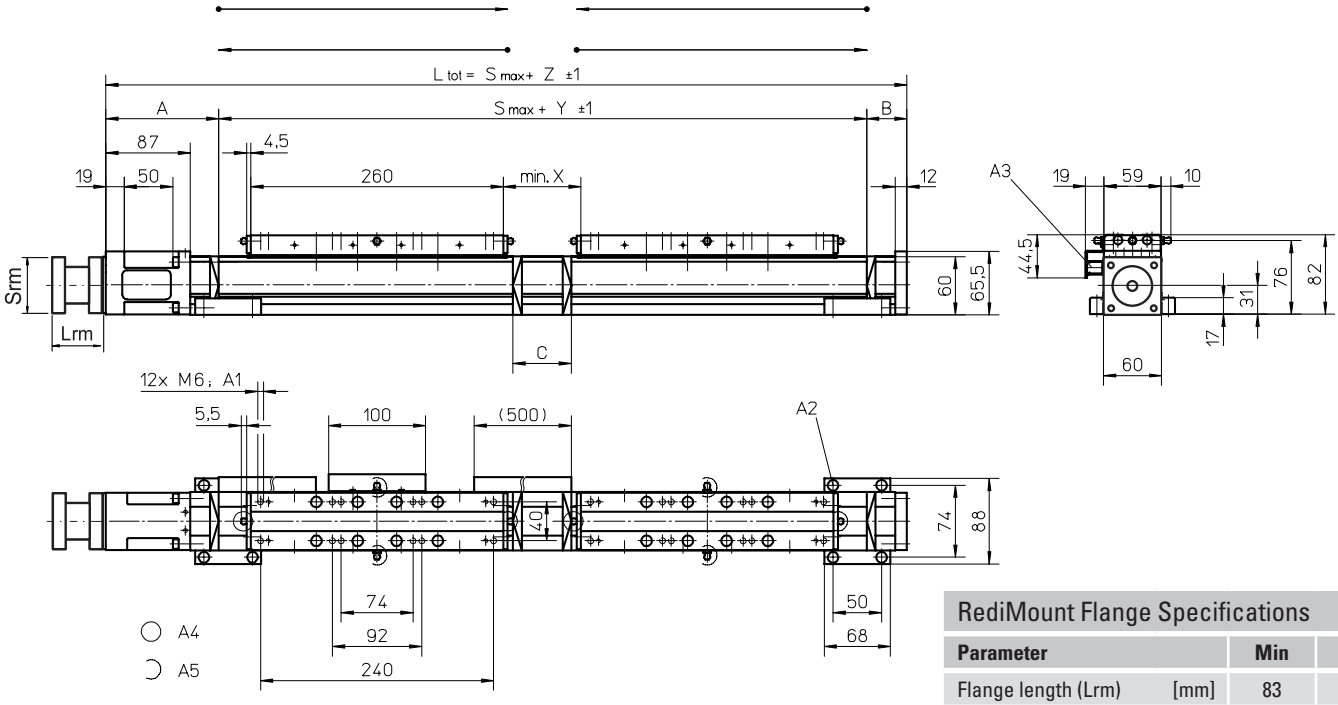


A1: depth 11
A2: socket cap screw ISO4762-M6×20 8.8
A3: ENF inductive sensor rail kit (optional - see page 150)
A4: tapered lubricating nipple to DIN71412 AM6 on fixed-bearing side as standard feature
A5: can be changed over to one of the three alternative lubricating points by the customer

### RediMount Flange Specifications

| Parameter | | Min | Max |
|---|---|---|---|
| Flange length (Lrm) | [mm] | 83 | 145 |
| Flange square (Srm) | [mm] | 90 | 200 |
| Flange weight * | [kg] | 5,64 | |

* Max. weight including coupling and fastening screws

### Saddle N

| Stroke length (Smax) [mm] | A [mm] | B [mm] | C [mm] | X [mm] | Y [mm] | Z [mm] |
|---|---|---|---|---|---|---|
| 0 - 1390 (0 - 1200) | 115 | 65 | 60 | 80 | 620 (1000) | 800 (1180) |
| 1391 - 2670 (1201 - 2480) | 165 | 115 | 210 | 230 | 770 (1150) | 1050 (1430) |
| 2671 - 4150 (2481 - 3960) | 185 | 135 | 250 | 270 | 810 (1190) | 1130 (1510) |
| 4151 - 5560 (3961 - 5370) | 210 | 160 | 300 | 320 | 860 (1240) | 1230 (1610) |
| 5561 - 10340 (5371 - 10150) | contact customer service | | | | | |

Values between brackets = for units with long carriage

### Saddle S

| Stroke length (Smax) [mm] | A [mm] | B [mm] | C [mm] | X [mm] | Y [mm] | Z [mm] |
|---|---|---|---|---|---|---|
| 0 - 1160 | 95 | 20 | 10 | 30 | 450 | 565 |
| 1161 - 2280 | 110 | 60 | 70 | 90 | 510 | 680 |
| 2281 - 3610 | 130 | 80 | 110 | 130 | 550 | 760 |
| 3611 - 4920 | 155 | 105 | 160 | 180 | 600 | 860 |
| 4921 - 5560 | contact customer service | | | | | |

## Performance Specifications

for Units with Single Long Carriage (L)

| Parameter | | WM60X |
|---|---|---|
| Carriage length | [mm] | 450 |
| Dynamic load torque (My), maximum | [Nm] | 500 |
| Dynamic load torque (Mz), maximum | [Nm] | 500 |
| Weight | [kg] | 3,1 |

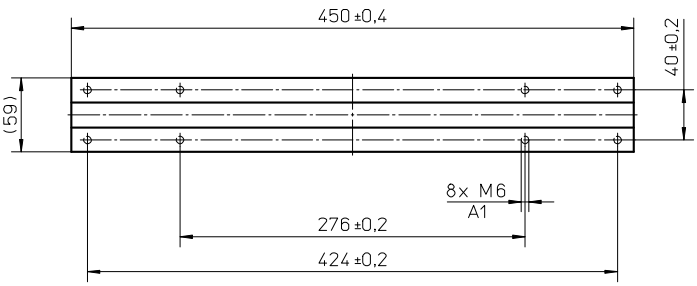


A1: depth 11

# WM80D

## Ball Screw Drive, Ball Guide, Double Ball Nuts

» Ordering key - see page 176
» Accessories - see page 117
» Additional data - see page 172

## General Specifications

| Parameter | WM80D |
|---|---|
| Profile size (w × h) [mm] | 80 × 80 |
| Type of screw | ball screw with double nuts |
| Carriage sealing system | self-adjusting plastic cover band |
| Screw supports | included in all units that require screw supports |
| Lubrication | central lubrication of all parts that require lubrication |
| Included accessories | 4 × mounting clamps |

## Performance Specifications

for Units with Single Standard Carriage (N)[1]

| Parameter | | WM80D |
|---|---|---|
| Stroke length (Smax), maximum<br>screw lead 5, 10, 20 mm<br>screw lead 50 mm | [mm] | <br>11000<br>4965 |
| Total length (L tot), maximum<br>screw lead 5, 10, 20 mm<br>screw lead 50 mm | [mm] | <br>12075<br>5780 |
| Linear speed, maximum | [m/s] | 2,5 |
| Acceleration, maximum | [m/s²] | 20 |
| Repeatability | [± mm] | 0,01 |
| Input speed, maximum | [rpm] | 3000 |
| Operation temperature limits | [°C] | 0 – 80 |
| Dynamic load (Fx), maximum | [N] | 5000 |
| Dynamic load (Fy), maximum | [N] | 3000 |
| Dynamic load (Fz), maximum | [N] | 3000 |
| Dynamic load torque (Mx), maximum | [Nm] | 350 |
| Dynamic load torque (My), maximum | [Nm] | 300 |
| Dynamic load torque (Mz), maximum | [Nm] | 300 |
| Drive shaft force (Frd), maximum [2] | [N] | 700 |
| Input/drive shaft torque (Mta), maximum | [Nm] | 55 |
| Ball screw diameter (d0) | [mm] | 25 |
| Ball screw lead (p) | [mm] | 5, 10, 20, 50 |
| Weight<br>of unit with zero stroke<br>of every 100 mm of stroke<br>of each carriage | [kg] | <br>11,57<br>1,08<br>4,26 |

[1] See next page for deviating values of units with other carriage types.
[2] Only relevant for units without RediMount flange.

## Carriage Idle Torque (M idle) [Nm]

| Input speed [rpm] | Screw lead [mm] | | | |
|---|---|---|---|---|
| | p = 5 | p = 10 | p = 20 | p = 50 |
| 150 | 1,1 | 1,5 | 1,8 | 2,3 |
| 1500 | 1,7 | 2.1 | 2,3 | 3,0 |
| 3000 | 2,1 | 2,5 | 2,6 | 3,6 |

M idle = the input torque needed to move the carriage with no load on it.

## Deflection of the Profile

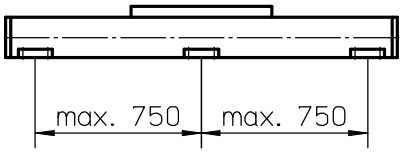


A mounting clamp must be installed at least every 750 mm to be able to operate at maximum load. Less clamps may be required if less load is being operated, see the additional technical data for more information. Units with a profile length over 6300 mm consist of two profiles where the joint between the two profiles must be adequately supported on both sides.

## Definition of Forces

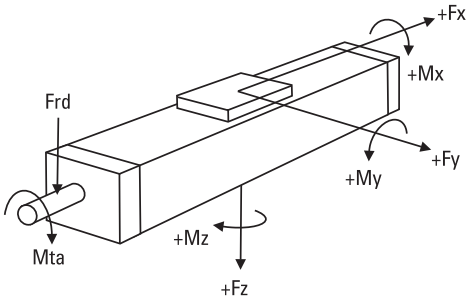

# WM80D

| Dimensions | Projection | Online Sizing & Selection! |
|---|---|---|
| METRIC | | www.LinearMotioneering.com |

## Ball Screw Drive, Ball Guide, Double Ball Nuts

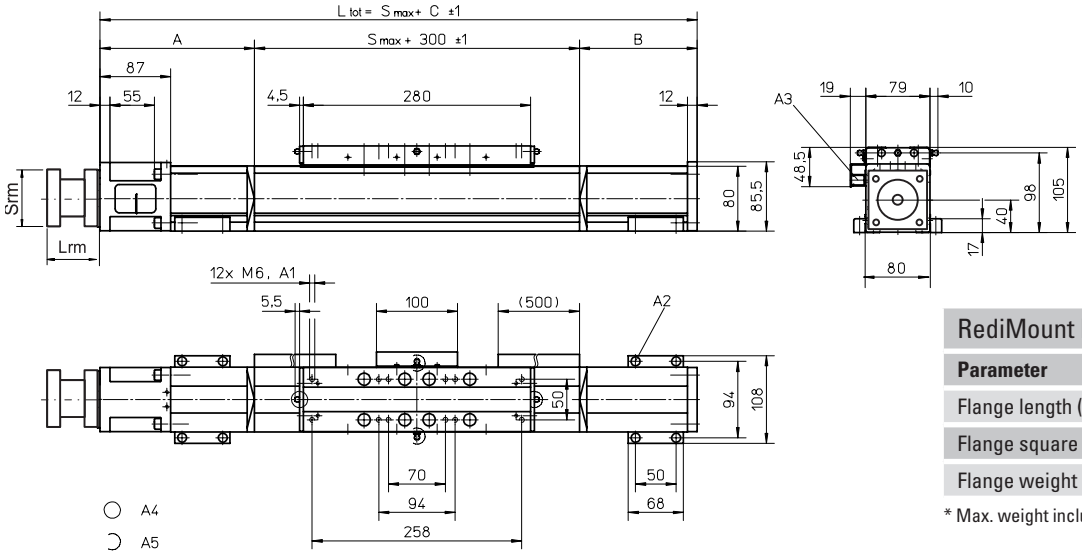


### RediMount Flange Specifications

| Parameter | | Min | Max |
|---|---|---|---|
| Flange length (Lrm) | [mm] | 83 | 145 |
| Flange square (Srm) | [mm] | 90 | 200 |
| Flange weight * | [kg] | 5,64 | |

* Max. weight including coupling and fastening screws

A1: depth 12 mm
A2: socket cap screw ISO4762-M6×20 8.8
A3: ENF inductive sensor rail kit (optional - see page 150)

A4: tapered lubricating nipple to DIN71412 AM6 on fixed-bearing side as standard feature
A5: can be changed over to one of three alternative lubrication points by customer

| Stroke length (Smax) [mm] | A [mm] | B [mm] | C [mm] |
|---|---|---|---|
| 0 - 780 (0 - 610) | 120 | 80 | 500 (670) |
| 781 - 1535 (611 - 1365) | 170 | 125 | 595 (765) |
| 1536 - 2375 (1366 - 2205) | 190 | 145 | 635 (805) |
| 2376 - 3205 (2206 - 3035) | 215 | 170 | 685 (855) |

Values between brackets = for units with long carriage

| Stroke length (Smax) [mm] | A [mm] | B [mm] | C [mm] |
|---|---|---|---|
| 3206 - 4045 (3036 - 3875) | 235 | 190 | 725 (895) |
| 4046 - 4885 (3876 - 4715) | 255 | 210 | 765 (935) |
| 4886 - 5000 (4716 - 4830) | 280 | 235 | 815 (985) |
| 5001 - 11000 (4717 - 10830) | contact customer service | | |

## Performance Specifications
for Units with Single Long Carriage (L)

| Parameter | | WM80D |
|---|---|---|
| Stroke length (Smax), maximum | [mm] | |
| screw lead 5, 10, 20 mm | | 10830 |
| screw lead 50 mm | | 4795 |
| Total length (L tot), maximum | [mm] | |
| screw lead 5, 10, 20 mm | | 12075 |
| screw lead 50 mm | | 5780 |
| Carriage length | [mm] | 450 |
| Dynamic load torque (My), maximum | [Nm] | 750 |
| Dynamic load torque (Mz), maximum | [Nm] | 750 |
| Weight | [kg] | 6,4 |

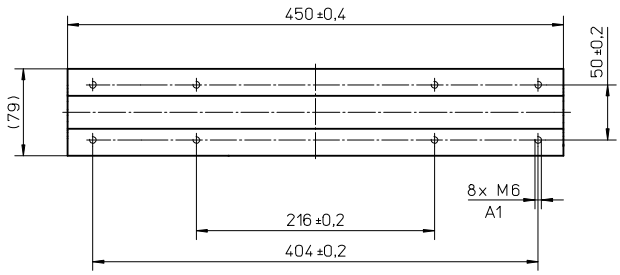


A1: depth 12 mm

## Performance Specifications
for Units with Double Standard Carriage (Z)

| Parameter | | WM80D |
|---|---|---|
| Stroke length (Smax), maximum | [mm] | |
| screw lead 5, 10, 20 mm | | 10640 |
| screw lead 50 mm | | 4655 |
| Total length (L tot), maximum | [mm] | |
| screw lead 5, 10, 20 mm | | 12075 |
| screw lead 50 mm | | 5780 |
| Minimum distance between carriages (Lc) | [mm] | 360 |
| Dynamic load (Fy), maximum | [N] | 6000 |
| Dynamic load (Fz), maximum | [N] | 6000 |
| Dynamic load torque (My), maximum | [Nm] | L c[1] × 3 |
| Dynamic load torque (Mz), maximum | [Nm] | L c[1] × 3 |
| Force required to move second carriage | [N] | 25 |
| Total length (L tot) | [mm] | Smax + C + Lc |

[1] Value in mm

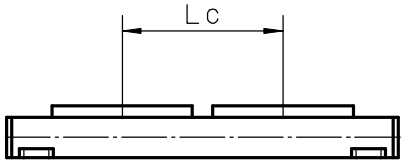

# WM80S

## Ball Screw Drive, Ball Guide, Single Ball Nut, Short Carriage

» Ordering key - see page 176
» Accessories - see page 117
» Additional data - see page 172

## General Specifications

| Parameter | WM80S |
|---|---|
| Profile size (w × h) [mm] | 80 × 80 |
| Type of screw | ball screw with single nut |
| Carriage sealing system | self-adjusting plastic cover band |
| Screw supports | included in all units that require screw supports |
| Lubrication | central lubrication of all parts that require lubrication |
| Included accessories | 4 × mounting clamps |

## Performance Specifications

for Units with Single Short Carriage (S)[1]

| Parameter | | WM80S |
|---|---|---|
| Stroke length (Smax), maximum<br>screw lead 5, 10, 20 mm<br>screw lead 50 mm | [mm] | <br>10540<br>5000 |
| Total length (L tot), maximum<br>screw lead 5, 10, 20 mm<br>screw lead 50 mm | [mm] | <br>11495<br>5645 |
| Linear speed, maximum | [m/s] | 2,5 |
| Acceleration, maximum | [m/s²] | 20 |
| Repeatability | [± mm] | 0,02 |
| Input speed, maximum | [rpm] | 3000 |
| Operation temperature limits | [°C] | 0 – 80 |
| Dynamic load (Fx), maximum | [N] | 3500 |
| Dynamic load (Fy), maximum | [N] | 2100 |
| Dynamic load (Fz), maximum | [N] | 2100 |
| Dynamic load torque (Mx), maximum | [Nm] | 150 |
| Dynamic load torque (My), maximum | [Nm] | 180 |
| Dynamic load torque (Mz), maximum | [Nm] | 180 |
| Drive shaft force (Frd), maximum [2] | [N] | 700 |
| Input/drive shaft torque (Mta), maximum | [Nm] | 55 |
| Ball screw diameter (d0) | [mm] | 25 |
| Ball screw lead (p) | [mm] | 5, 10, 20, 50 |
| Weight<br>of unit with zero stroke<br>of every 100 mm of stroke<br>of each carriage | [kg] | <br>7,0<br>1,1<br>1,6 |

[1] See next page for deviating values of units with other carriage types.
[2] Only relevant for units without RediMount flange.

## Carriage Idle Torque (M idle) [Nm]

| Input speed [rpm] | Screw lead [mm] | | | |
|---|---|---|---|---|
| | p = 5 | p = 10 | p = 20 | p = 50 |
| 150 | 0,9 | 1,1 | 1,3 | 2,0 |
| 1500 | 1,3 | 1,5 | 1,8 | 2,4 |
| 3000 | 1,7 | 1,8 | 2,0 | 2,9 |

M idle = the input torque needed to move the carriage with no load on it.

## Deflection of the Profile

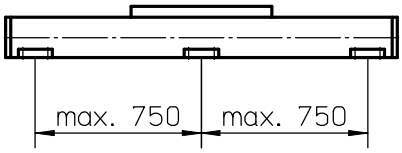


A mounting clamp must be installed at least every 750 mm to be able to operate at maximum load. Less clamps may be required if less load is being operated, see the additional technical data for more information. Units with a profile length over 6300 mm consist of two profiles where the joint between the two profiles must be adequately supported on both sides.

## Definition of Forces

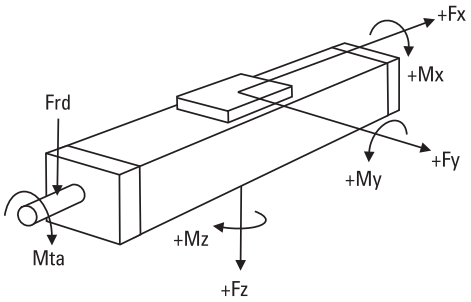

# WM80S

| Dimensions | Projection | Online Sizing & Selection! |
|---|---|---|
| METRIC | | www.LinearMotioneering.com |

## Ball Screw Drive, Ball Guide, Single Ball Nut, Short Carriage

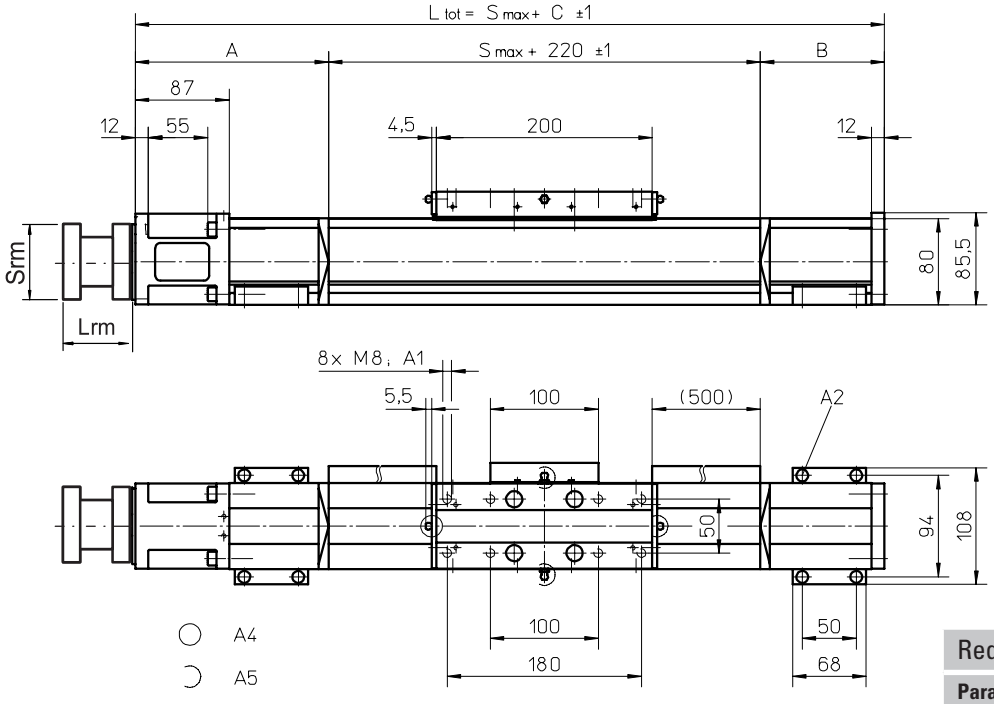


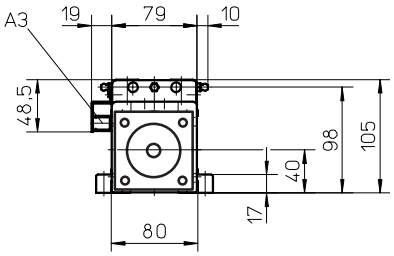


| RediMount Flange Specifications | | | |
|---|---|---|---|
| **Parameter** | | **Min** | **Max** |
| Flange length (Lrm) | [mm] | 83 | 145 |
| Flange square (Srm) | [mm] | 90 | 200 |
| Flange weight * | [kg] | 5,64 | |

* Max. weight including coupling and fastening screws

A1: depth 12 mm
A2: socket cap screw ISO4762-M6×20 8.8
A3: ENF inductive sensor rail kit (optional - see page 150)

A4: tapered lubricating nipple to DIN71412 AM6 on fixed-bearing side as standard feature
A5: can be changed over to one of three alternative lubrication points by customer

| Stroke length (Smax) [mm] | A [mm] | B [mm] | C [mm] |
|---|---|---|---|
| 0 - 680 | 95 | 35 | 350 |
| 681 - 1310 | 125 | 80 | 425 |
| 1311 - 2065 | 150 | 105 | 475 |
| 2066 - 2830 | 170 | 125 | 515 |
| 2831 - 3590 | 195 | 150 | 565 |
| 3591 - 4355 | 215 | 170 | 605 |
| 4356 - 5000 | 235 | 190 | 645 |

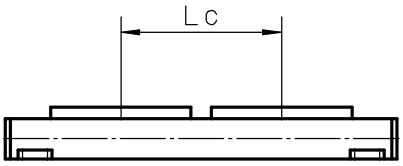


## Performance Specifications
for Units with Double Short Carriage (Y)

| Parameter | | WM80S |
|---|---|---|
| Stroke length (Smax), maximum<br>screw lead 5, 10, 20 mm<br>screw lead 50 mm | [mm] | <br>10260<br>4720 |
| Total length (L tot), maximum<br>screw lead 5, 10, 20 mm<br>screw lead 50 mm | [mm] | <br>11495<br>5645 |
| Minimum distance between carriages (Lc) | [mm] | 280 |
| Dynamic load (Fy), maximum | [N] | 4200 |
| Dynamic load (Fz), maximum | [N] | 4200 |
| Dynamic load torque (My), maximum | [Nm] | L c[1] × 2,1 |
| Dynamic load torque (Mz), maximum | [Nm] | L c[1] × 2,1 |
| Force required to move second carriage | [N] | 22,5 |
| Total length (L tot) | [mm] | Smax + C + Lc |

[1] Value in mm

# WM120D

## Ball Screw Drive, Ball Guide, Double Ball Nuts

» Ordering key - see page 176
» Accessories - see page 117
» Additional data - see page 172

## General Specifications

| Parameter | WM120D |
|---|---|
| Profile size (w × h) [mm] | 120 × 120 |
| Type of screw | ball screw with double nuts |
| Carriage sealing system | self-adjusting plastic cover band |
| Screw supports | included in all units that require screw supports |
| Lubrication | central lubrication of all parts that require lubrication |
| Included accessories | 4 × mounting clamps |

## Performance Specifications

for Units with Single Standard Carriage (N)[1]

| Parameter | | WM120D |
|---|---|---|
| Stroke length (Smax), maximum<br>screw lead 5, 10, 20 mm<br>screw lead 40 mm | [mm] | <br>11000<br>4765 |
| Total length (L tot), maximum<br>screw lead 5, 10, 20 mm<br>screw lead 40 mm | [mm] | <br>12415<br>5780 |
| Linear speed, maximum | [m/s] | 2,0 |
| Acceleration, maximum | [m/s²] | 20 |
| Repeatability | [± mm] | 0,01 |
| Input speed, maximum | [rpm] | 3000 |
| Operation temperature limits | [°C] | 0 – 80 |
| Dynamic load (Fx), maximum<br>screw lead 5, 10, 20 mm<br>screw lead 40 mm | [N] | <br>12000<br>8000 |
| Dynamic load (Fy), maximum | [N] | 6000 |
| Dynamic load (Fz), maximum | [N] | 6000 |
| Dynamic load torque (Mx), maximum | [Nm] | 500 |
| Dynamic load torque (My), maximum | [Nm] | 600 |
| Dynamic load torque (Mz), maximum | [Nm] | 600 |
| Drive shaft force (Frd), maximum [2] | [N] | 1000 |
| Input/drive shaft torque (Mta), maximum | [Nm] | 80 |
| Ball screw diameter ($d_0$) | [mm] | 32 |
| Ball screw lead (p) | [mm] | 5, 10, 20, 40 |
| Weight<br>of unit with zero stroke<br>of every 100 mm of stroke<br>of each carriage | [kg] | <br>25,91<br>1,93<br>9,25 |

[1] See next page for deviating values of units with other carriage types.
[2] Only relevant for units without RediMount flange.

## Carriage Idle Torque (M idle) [Nm]

| Input speed [rpm] | Screw lead [mm] | | | |
|---|---|---|---|---|
| | p = 5 | p = 10 | p = 20 | p = 40 |
| 150 | 1,4 | 2,0 | 2,3 | 2,4 |
| 1500 | 2,5 | 3,0 | 3,3 | 3,8 |
| 3000 | 3,0 | 3,7 | 4,0 | 4,3 |

M idle = the input torque needed to move the carriage with no load on it.

## Deflection of the Profile

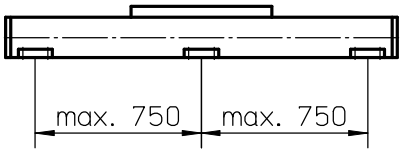


A mounting clamp must be installed at least every 750 mm to be able to operate at maximum load. Less clamps may be required if less load is being operated, see the additional technical data for more information. Units with a profile length over 5400 mm consist of two profiles where the joint between the two profiles must be adequately supported on both sides.

## Definition of Forces

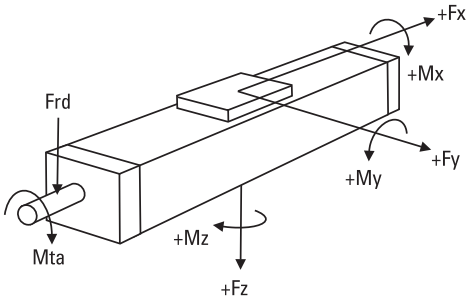

# WM120D

| Dimensions | Projection | Online Sizing & Selection! |
|---|---|---|
| METRIC | | www.LinearMotioneering.com |

## Ball Screw Drive, Ball Guide, Double Ball Nuts

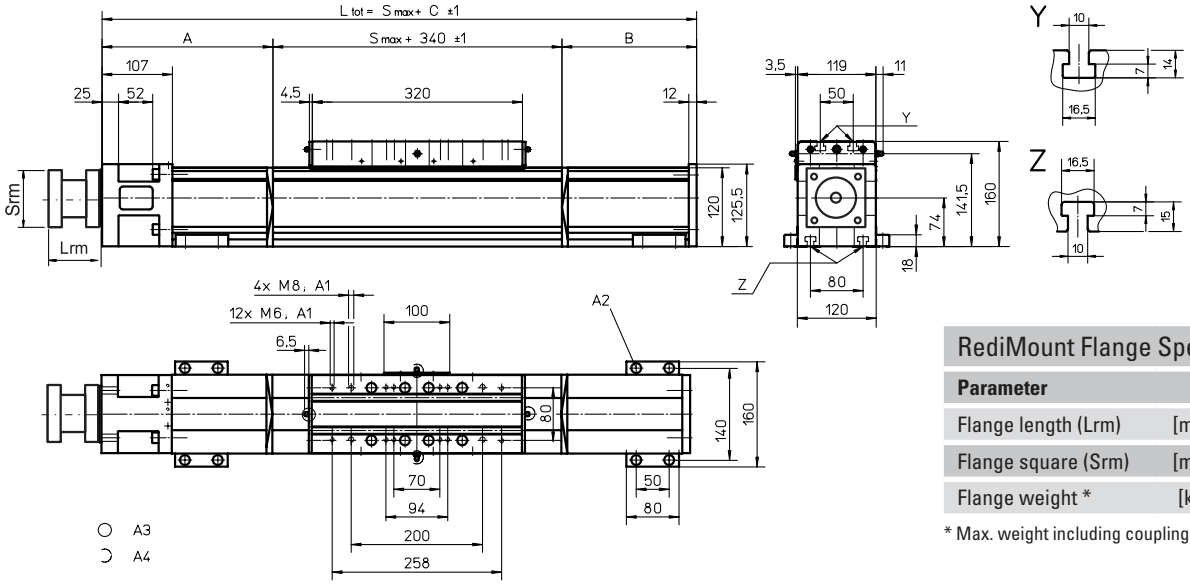


| RediMount Flange Specifications | | | |
|---|---|---|---|
| **Parameter** | | **Min** | **Max** |
| Flange length (Lrm) | [mm] | 87 | 149 |
| Flange square (Srm) | [mm] | 90 | 200 |
| Flange weight * | [kg] | 6,03 | |

* Max. weight including coupling and fastening screws

A1: depth 22
A2: socket cap screw ISO4762-M8×20 8.8
A3: tapered lubricating nipple to DIN71412 M8×1 on fixed-bearing side as standard feature
A4: can be changed over to one of the three alternative lubricating points by the customer

| Stroke length (Smax) [mm] | A [mm] | B [mm] | C [mm] |
|---|---|---|---|
| 0 - 890 (0 - 710) | 155 | 100 | 595 (775) |
| 891 - 1695 (711 - 1515) | 225 | 170 | 735 (915) |
| 1696 - 2625 (1516 - 2445) | 260 | 205 | 805 (985) |
| 2626 - 3555 (2446 - 3375) | 295 | 240 | 875 (1055) |

Values between brackets = for units with long carriage

| Stroke length (Smax) [mm] | A [mm] | B [mm] | C [mm] |
|---|---|---|---|
| 3556 - 4485 (3376 - 4305) | 330 | 275 | 945 (1125) |
| 4486 - 5000 (4306 - 4820) | 365 | 310 | 1015 (1195) |
| 5001 - 11000 (4307 - 10820) | contact customer service | | |

## Performance Specifications
for Units with Single Long Carriage (L)

| Parameter | | WM120D |
|---|---|---|
| Stroke length (Smax), maximum<br>screw lead 5, 10, 20 mm<br>screw lead 40 mm | [mm] | <br>11000<br>4585 |
| Total length (L tot), maximum<br>screw lead 5, 10, 20 mm<br>screw lead 40 mm | [mm] | <br>12595<br>5780 |
| Carriage length | [mm] | 500 |
| Dynamic load torque (My), maximum | [Nm] | 1500 |
| Dynamic load torque (Mz), maximum | [Nm] | 1500 |
| Weight | [kg] | 14,2 |

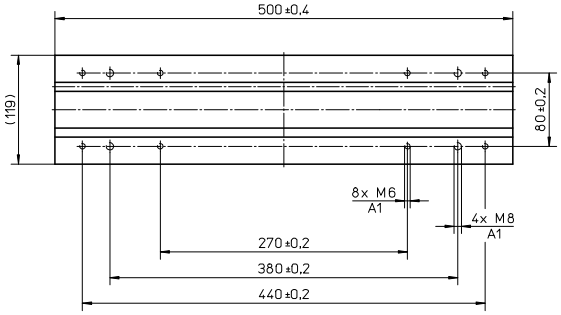


A1: depth 22

## Performance Specifications
for Units with Double Standard Carriage (Z)

| Parameter | | WM120D |
|---|---|---|
| Stroke length (Smax), maximum<br>screw lead 5, 10, 20 mm<br>screw lead 40 mm | [mm] | <br>10730<br>4385 |
| Total length (L tot), maximum<br>screw lead 5, 10, 20 mm<br>screw lead 40 mm | [mm] | <br>12595<br>5780 |
| Minimum distance between carriages (Lc) | [mm] | 450 |
| Dynamic load (Fy), maximum | [N] | 12000 |
| Dynamic load (Fz), maximum | [N] | 12000 |
| Dynamic load torque (My), maximum | [Nm] | L c[1] × 6 |
| Dynamic load torque (Mz), maximum | [Nm] | L c[1] × 6 |
| Force required to move second carriage | [N] | 30 |
| Total length (L tot) | [mm] | Smax + C + Lc |

[1] Value in mm

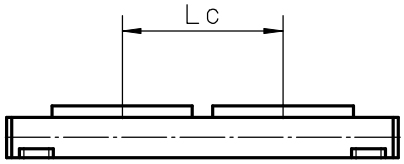

# WV60

## Ball Screw Drive, No Guides

» Ordering key - see page 177
» Accessories - see page 117
» Additional data - see page 172

## General Specifications

| Parameter | WV60 |
|---|---|
| Profile size (w × h) [mm] | 60 × 60 |
| Type of screw | ball screw with double nut |
| Carriage sealing system | self-adjusting plastic cover band |
| Screw supports | included in all units that require screw supports |
| Lubrication | central lubrication of all parts that require lubrication |
| Included accessories | 4 × mounting clamps |

## Performance Specifications

| Parameter | | WV60 |
|---|---|---|
| Stroke length (Smax), maximum<br>screw lead 5, 20 mm<br>screw lead 50 mm | [mm] | <br>11000<br>5000 |
| Total length (L tot), maximum<br>screw lead 5, 20 mm<br>screw lead 50 mm | [mm] | <br>12050<br>5700 |
| Linear speed, maximum | [m/s] | 2,5 |
| Acceleration, maximum | [m/s²] | 20 |
| Repeatability | [± mm] | 0,01 |
| Input speed, maximum | [rpm] | 3000 |
| Operation temperature limits | [°C] | 0 – 80 |
| Dynamic load (Fx), maximum | [N] | 4000 |
| Dynamic load (Fy), maximum | [N] | 0 |
| Dynamic load (Fz), maximum | [N] | 0 |
| Dynamic load torque (Mx), maximum | [Nm] | 0 |
| Dynamic load torque (My), maximum | [Nm] | 0 |
| Dynamic load torque (Mz), maximum | [Nm] | 0 |
| Drive shaft force (Frd), maximum [1] | [N] | 500 |
| Input/drive shaft torque (Mta), maximum | [Nm] | 35 |
| Ball screw diameter (d0) | [mm] | 20 |
| Ball screw lead (p) | [mm] | 5, 20, 50 |
| Weight<br>of unit with zero stroke<br>of every 100 mm of stroke<br>of each carriage | [kg] | <br>4,72<br>0,55<br>1,42 |

[1] Only relevant for units without RediMount flange.

## Carriage Idle Torque (M idle) [Nm]

| Input speed [rpm] | Screw lead [mm] | | |
|---|---|---|---|
| | p = 5 | p = 20 | p = 50 |
| 150 | 0,7 | 0,9 | 1,1 |
| 1500 | 1,3 | 1,5 | 1,5 |
| 3000 | 1,7 | 1,9 | 2,1 |

M idle = the input torque needed to move the carriage with no load on it.

## Deflection of the Profile

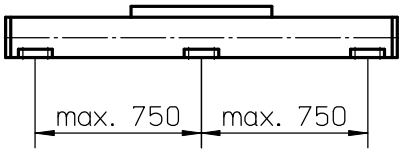


A mounting clamp must be installed at least every 750 mm to be able to operate at maximum load. Less clamps may be required if less load is being operated, see the additional technical data for more information. Units with a profile length over 6300 mm consist of two profiles where the joint between the two profiles must be adequately supported on both sides.

## Definition of Forces

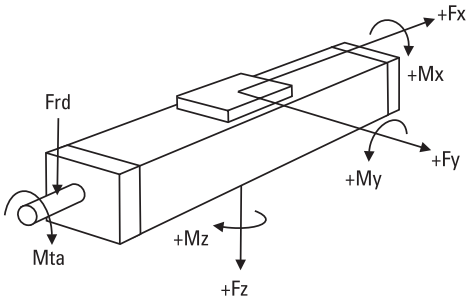

# WV60

## Ball Screw Drive, No Guides

| Dimensions | Projection | Online Sizing & Selection! |
|---|---|---|
| METRIC | | www.LinearMotioneering.com |

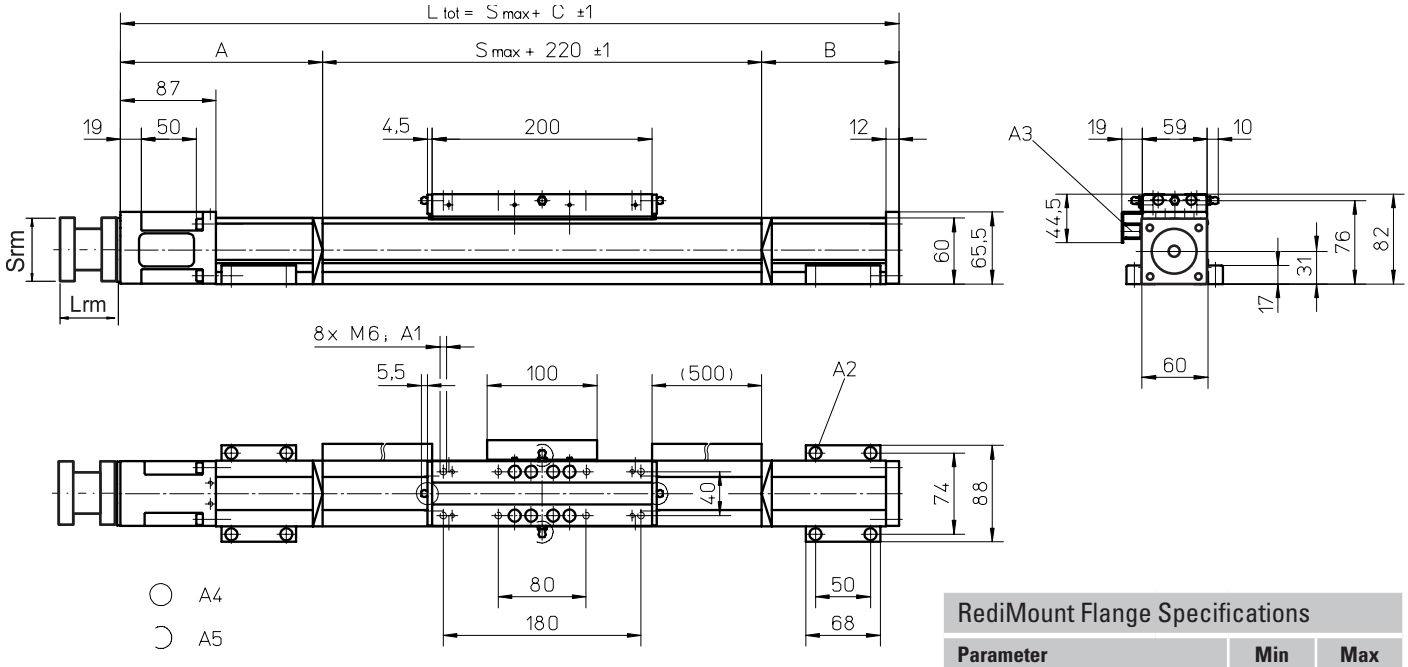


A1: depth 11
A2: socket cap screw ISO4762-M6×20 8.8
A3: ENF inductive sensor rail kit (optional - see page 150)
A4: tapered lubricating nipple to DIN71412 AM6 on fixed-bearing side as standard feature
A5: can be changed over to one of the three alternative lubricating points by the customer

### RediMount Flange Specifications

| Parameter | | Min | Max |
|---|---|---|---|
| Flange length (Lrm) | [mm] | 83 | 145 |
| Flange square (Srm) | [mm] | 90 | 200 |
| Flange weight * | [kg] | 5,64 | |

* Max. weight including coupling and fastening screws

| Stroke length (Smax) [mm] | A [mm] | B [mm] | C [mm] |
|---|---|---|---|
| 0 - 690 | 130 | 80 | 430 |
| 691 - 1415 | 155 | 105 | 480 |
| 1416 - 2155 | 175 | 125 | 520 |
| 2156 - 2885 | 200 | 150 | 570 |

| Stroke length (Smax) [mm] | A [mm] | B [mm] | C [mm] |
|---|---|---|---|
| 2886 - 3625 | 220 | 170 | 610 |
| 3626 - 4355 | 245 | 195 | 660 |
| 4256 - 5095 | 265 | 215 | 700 |
| 5096 - 11000 | contact customer service | | |

# WV80

## Ball Screw Drive, No Guides

» Ordering key - see page 177
» Accessories - see page 117
» Additional data - see page 172

## General Specifications

| Parameter | WV80 |
|---|---|
| Profile size (w × h) [mm] | 80 × 80 |
| Type of screw | ball screw with double nuts |
| Carriage sealing system | self-adjusting plastic cover band |
| Screw supports | included in all units that require screw supports |
| Lubrication | central lubrication of all parts that require lubrication |
| Included accessories | 4 × mounting clamps |

## Performance Specifications

| Parameter | | WV80 |
|---|---|---|
| Stroke length (Smax), maximum<br>screw lead 5, 10, 20 mm<br>screw lead 50 mm | [mm] | <br>11000<br>5000 |
| Total length (L tot), maximum<br>screw lead 5, 10, 20 mm<br>screw lead 50 mm | [mm] | <br>11945<br>5635 |
| Linear speed, maximum | [m/s] | 2,5 |
| Acceleration, maximum | [m/s²] | 20 |
| Repeatability | [± mm] | 0,01 |
| Input speed, maximum | [rpm] | 3000 |
| Operation temperature limits | [°C] | 0 – 80 |
| Dynamic load (Fx), maximum | [N] | 5000 |
| Dynamic load (Fy), maximum | [N] | 0 |
| Dynamic load (Fz), maximum | [N] | 0 |
| Dynamic load torque (Mx), maximum | [Nm] | 0 |
| Dynamic load torque (My), maximum | [Nm] | 0 |
| Dynamic load torque (Mz), maximum | [Nm] | 0 |
| Drive shaft force (Frd), maximum [1] | [N] | 700 |
| Input/drive shaft torque (Mta), maximum | [Nm] | 55 |
| Ball screw diameter (d0) | [mm] | 25 |
| Ball screw lead (p) | [mm] | 5, 10, 20, 50 |
| Weight<br>of unit with zero stroke<br>of every 100 mm of stroke<br>of each carriage | [kg] | <br>7,95<br>0,99<br>2,25 |

[1] Only relevant for units without RediMount flange.

## Carriage Idle Torque (M idle) [Nm]

| Input speed [rpm] | Screw lead [mm] | | | |
|---|---|---|---|---|
| | p = 5 | p = 10 | p = 20 | p = 50 |
| 150 | 0,9 | 1,1 | 1,3 | 1,4 |
| 1500 | 1,6 | 1,9 | 2,1 | 2,3 |
| 3000 | 2,0 | 2,4 | 2,6 | 3,0 |

M idle = the input torque needed to move the carriage with no load on it.

## Deflection of the Profile

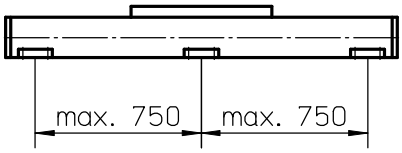


A mounting clamp must be installed at least every 750 mm to be able to operate at maximum load. Less clamps may be required if less load is being operated, see the additional technical data for more information. Units with a profile length over 6300 mm consist of two profiles where the joint between the two profiles must be adequately supported on both sides.

## Definition of Forces

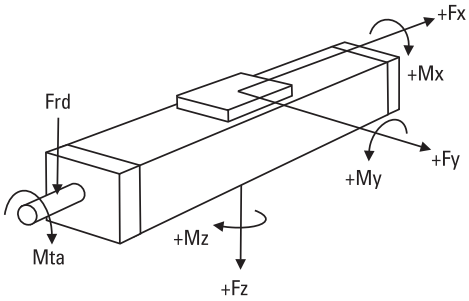

# WV80

## Ball Screw Drive, No Guides

| Dimensions | Projection | Online Sizing & Selection! |
|---|---|---|
| METRIC | | www.LinearMotioneering.com |

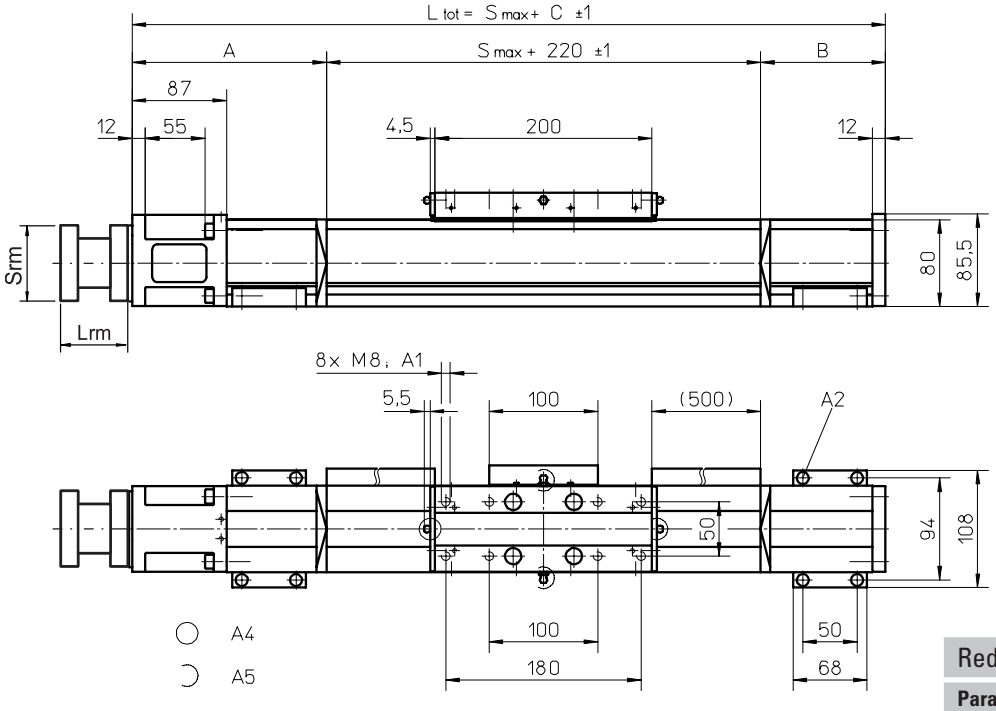


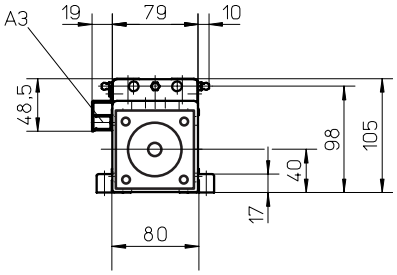


A1: depth 12 mm
A2: socket cap screw ISO4762-M6×20 8.8
A3: ENF inductive sensor rail kit (optional - see page 150)
A4: tapered lubricating nipple to DIN71412 AM6 on fixed-bearing side as standard feature
A5: can be changed over to one of three alternative lubrication points by customer

### RediMount Flange Specifications

| Parameter | | Min | Max |
|---|---|---|---|
| Flange length (Lrm) | [mm] | 83 | 145 |
| Flange square (Srm) | [mm] | 90 | 200 |
| Flange weight * | [kg] | 5,64 | |

* Max. weight including coupling and fastening screws

| Stroke length (Smax) [mm] | A [mm] | B [mm] | C [mm] |
|---|---|---|---|
| 0 - 775 | 125 | 50 | 395 |
| 776 - 1670 | 145 | 95 | 460 |
| 1671 - 2505 | 170 | 115 | 505 |
| 2506 - 3340 | 190 | 140 | 550 |

| Stroke length (Smax) [mm] | A [mm] | B [mm] | C [mm] |
|---|---|---|---|
| 3341 - 4175 | 210 | 160 | 590 |
| 4176 - 5015 | 235 | 180 | 635 |
| 5016 - 11000 | contact customer service | | |

# WV120

## Ball Screw Drive, No Guides

» Ordering key - see page 177
» Accessories - see page 117
» Additional data - see page 172

## General Specifications

| Parameter | WV120 |
|---|---|
| Profile size (w × h) [mm] | 120 × 120 |
| Type of screw | ball screw with double nuts |
| Carriage sealing system | self-adjusting plastic cover band |
| Screw supports | included in all units that require screw supports |
| Lubrication | central lubrication of all parts that require lubrication |
| Included accessories | 4 × mounting clamps |

## Performance Specifications

| Parameter | | WV120 |
|---|---|---|
| Stroke length (Smax), maximum<br>screw lead 5, 10, 20 mm<br>screw lead 40 mm | [mm] | <br>11000<br>5000 |
| Total length (L tot), maximum<br>screw lead 5, 10, 20 mm<br>screw lead 40 mm | [mm] | <br>12260<br>5845 |
| Linear speed, maximum | [m/s] | 2,0 |
| Acceleration, maximum | [m/s²] | 20 |
| Repeatability | [± mm] | 0,01 |
| Input speed, maximum | [rpm] | 3000 |
| Operation temperature limits | [°C] | 0 – 80 |
| Dynamic load (Fx), maximum<br>screw lead 5, 10, 20 mm<br>screw lead 40 mm | [N] | <br>12000<br>8000 |
| Dynamic load (Fy), maximum | [N] | 0 |
| Dynamic load (Fz), maximum | [N] | 0 |
| Dynamic load torque (Mx), maximum | [Nm] | 0 |
| Dynamic load torque (My), maximum | [Nm] | 0 |
| Dynamic load torque (Mz), maximum | [Nm] | 0 |
| Drive shaft force (Frd), maximum [1] | [N] | 1000 |
| Input/drive shaft torque (Mta), maximum | [Nm] | 80 |
| Ball screw diameter (d0) | [mm] | 32 |
| Ball screw lead (p) | [mm] | 5, 10, 20, 40 |
| Weight<br>of unit with zero stroke<br>of every 100 mm of stroke<br>of each carriage | [kg] | <br>18,10<br>1,94<br>4,75 |

[1] Only relevant for units without RediMount flange.

## Carriage Idle Torque (M idle) [Nm]

| Input speed [rpm] | Screw lead [mm] | | | |
|---|---|---|---|---|
| | p = 5 | p = 10 | p = 20 | p = 40 |
| 150 | 1,0 | 1,1 | 1,4 | 1,5 |
| 1500 | 2,1 | 2,2 | 2,5 | 2,8 |
| 3000 | 2,4 | 2,6 | 3,0 | 3,5 |

M idle = the input torque needed to move the carriage with no load on it.

## Deflection of the Profile

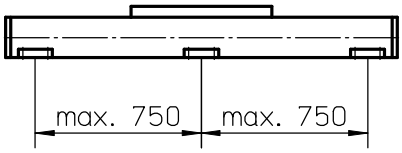


A mounting clamp must be installed at least every 750 mm to be able to operate at maximum load. Less clamps may be required if less load is being operated, see the additional technical data for more information. Units with a profile length over 5400 mm consist of two profiles where the joint between the two profiles must be adequately supported on both sides.

## Definition of Forces

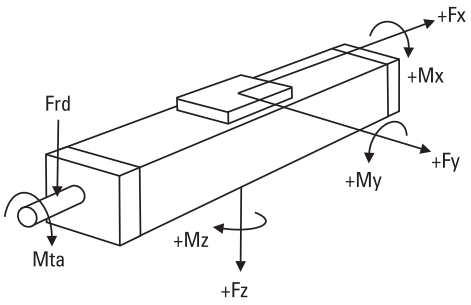

# WV120

## Ball Screw Drive, No Guides

| Dimensions | Projection | Online Sizing & Selection! |
|---|---|---|
| METRIC | | www.LinearMotioneering.com |

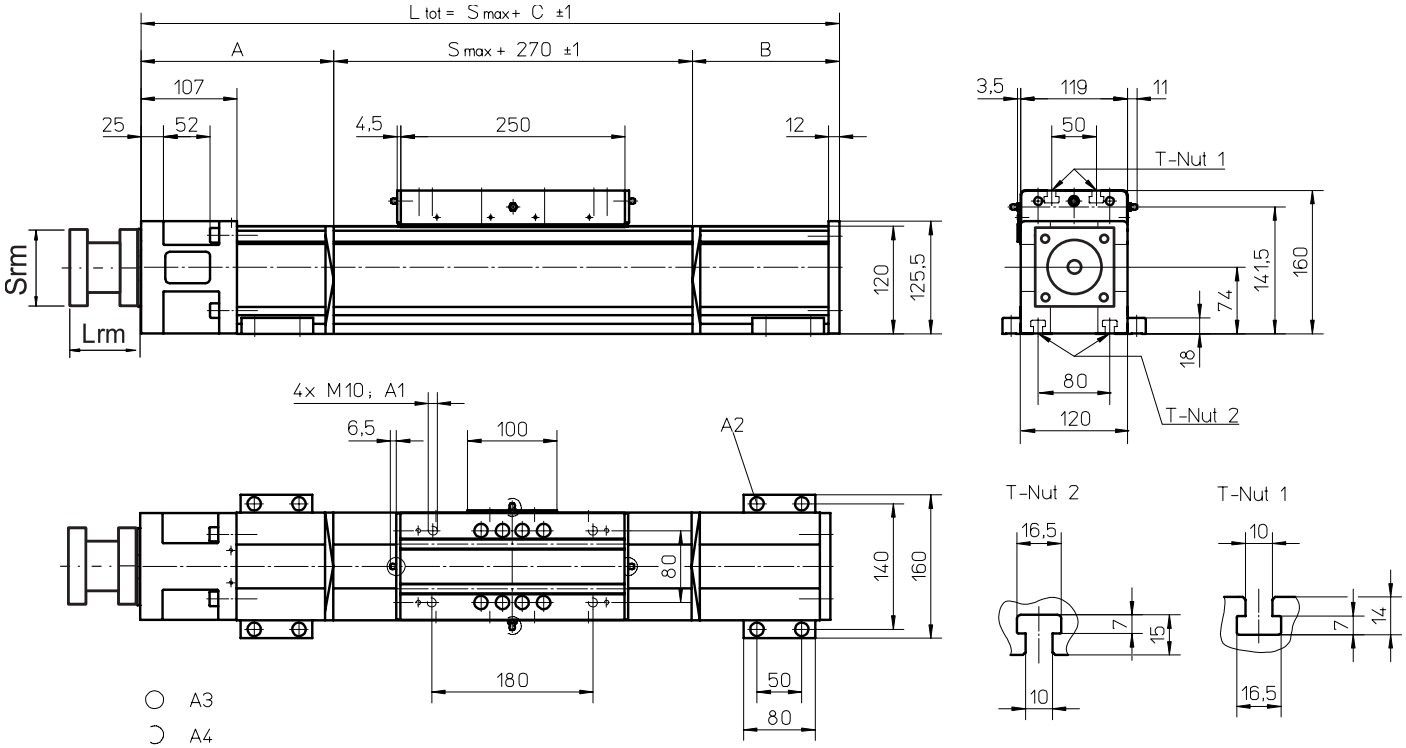


A1: depth 22
A2: socket cap screw ISO4762-M8×20 8.8
A3: tapered lubricating nipple to DIN71412 M8×1 on fixed-bearing side as standard feature
A4: can be changed over to one of the three alternative lubricating points by the customer

| RediMount Flange Specifications | | | |
|---|---|---|---|
| **Parameter** | | **Min** | **Max** |
| Flange length (Lrm) | [mm] | 87 | 149 |
| Flange square (Srm) | [mm] | 90 | 200 |
| Flange weight * | [kg] | 6,03 | |

* Max. weight including coupling and fastening screws

| Stroke length (Smax) [mm] | A [mm] | B [mm] | C [mm] |
|---|---|---|---|
| 0 - 940 | 145 | 50 | 465 |
| 941 - 1860 | 180 | 120 | 570 |
| 1861 - 2790 | 215 | 155 | 640 |
| 2791 - 3720 | 250 | 190 | 710 |

| Stroke length (Smax) [mm] | A [mm] | B [mm] | C [mm] |
|---|---|---|---|
| 3721 - 4650 | 285 | 225 | 780 |
| 4651 - 5000 | 320 | 255 | 845 |
| 5001 - 11000 | contact customer service | | |

# MLSM60D

## Ball Screw Drive, Ball Guide

» Ordering key - see page 178
» Accessories - see page 117
» Additional data - see page 172

## General Specifications

| Parameter | MLSM60D |
|---|---|
| Profile size (w × h) [mm] | 160 × 65 |
| Type of screw | ball screw with double nuts |
| Carriage sealing system | plastic cover band |
| Screw supports | included in all units that require screw supports |
| Lubrication | central lubrication of all parts that require lubrication |
| Included accessories | 4 × mounting clamps |

## Performance Specifications

for Units with Single Standard Carriage (N)[1]

| Parameter | | MLSM60D |
|---|---|---|
| Stroke length (Smax), maximum | [mm] | 4985 |
| Total length (L tot), maximum | [mm] | 5700 |
| Linear speed, maximum | [m/s] | 2,5 |
| Acceleration, maximum | [m/s²] | 20 |
| Repeatability | [± mm] | 0,01 |
| Input speed, maximum | [rpm] | 3000 |
| Operation temperature limits | [°C] | 0 – 80 |
| Dynamic load (Fx), maximum | [N] | 5000 |
| Dynamic load (Fy), maximum | [N] | 6000 |
| Dynamic load (Fz), maximum | [N] | 6000 |
| Dynamic load torque (Mx), maximum | [Nm] | 400 |
| Dynamic load torque (My), maximum | [Nm] | 460 |
| Dynamic load torque (Mz), maximum | [Nm] | 460 |
| Drive shaft force (Frd), maximum [2] | [N] | 350 |
| Input/drive shaft torque (Mta), maximum | [Nm] | 60 |
| Ball screw diameter (d0) | [mm] | 25 |
| Ball screw lead (p) | [mm] | 5, 10, 20, 50 |
| Weight | [kg] | |
| of unit with zero stroke | | 14,40 |
| of every 100 mm of stroke | | 1,65 |
| of each carriage | | 5,70 |

[1] See next page for deviating values of units with other carriage types.
[2] Only relevant for units without RediMount flange.

## Carriage Idle Torque (M idle) [Nm]

| Input speed [rpm] | Screw lead [mm] | | | |
|---|---|---|---|---|
| | p = 5 | p = 10 | p = 20 | p = 50 |
| 150 | 1,0 | 1,6 | 1,9 | 2,7 |
| 1500 | 1,6 | 2,2 | 2,3 | 3,4 |
| 3000 | 2,0 | 2,6 | 2,6 | 4,0 |

M idle = the input torque needed to move the carriage with no load on it.

## Deflection of the Profile

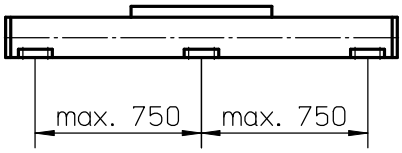


A mounting clamp must be installed at least every 750 mm to be able to operate at maximum load. Less clamps may be required if less load is being operated, see the additional technical data for more information.

## Definition of Forces

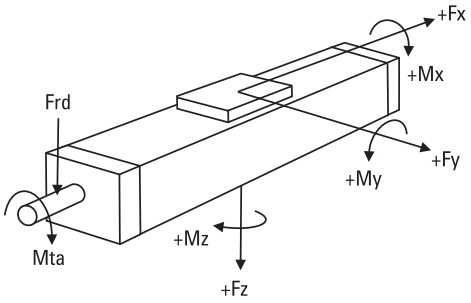

# MLSM60D

## Ball Screw Drive, Ball Guide

| Dimensions | Projection | Online Sizing & Selection! |
|---|---|---|
| METRIC | | www.LinearMotioneering.com |

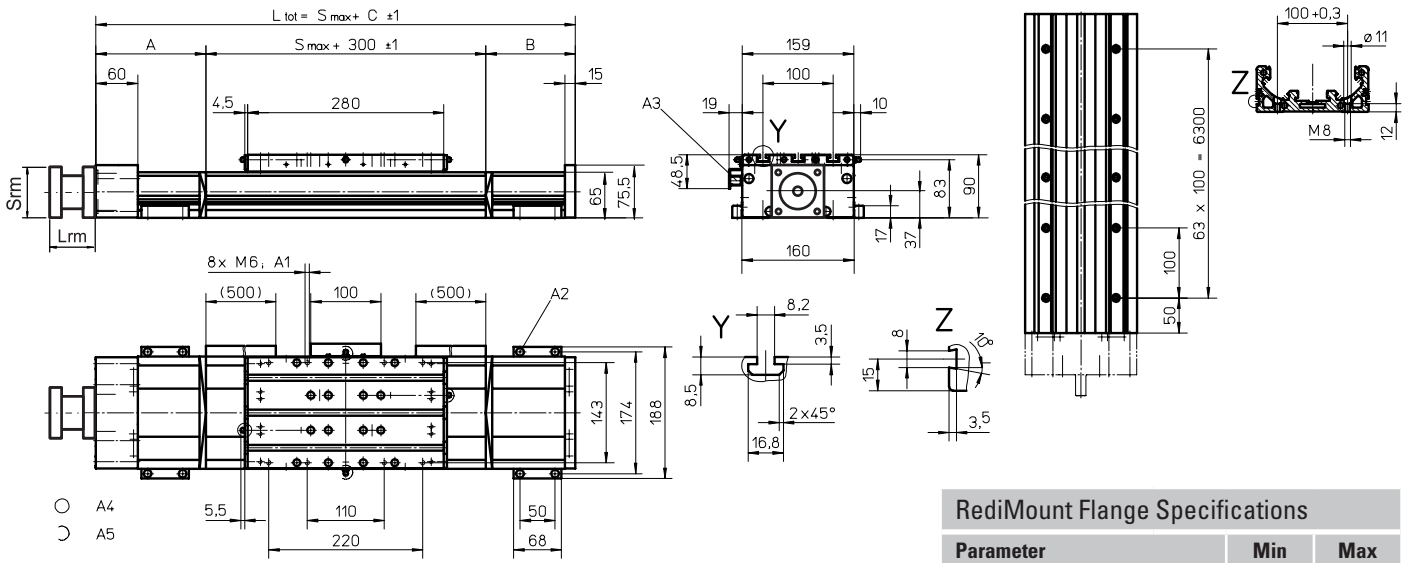


A1: depth 10
A2: socket cap screw ISO4762-M6×20 8.8
A3: ENF inductive sensor rail kit (optional - see page 150)
A4: tapered lubricating nipple to DIN71412 AM6 on fixed-bearing side as standard feature
A5: can be changed over to one of the three alternative lubricating points by the customer

### RediMount Flange Specifications

| Parameter | | Min | Max |
|---|---|---|---|
| Flange length (Lrm) | [mm] | 81 | 143 |
| Flange square (Srm) | [mm] | 90 | 200 |
| Flange weight * | [kg] | 5,58 | |

* Max. weight including coupling and fastening screws

| Stroke length (Smax) [mm] | A [mm] | B [mm] | C [mm] |
|---|---|---|---|
| 0 - 750 (0 - 580) | 90 | 45 | 435 (605) |
| 751 - 1220 (581 - 1050) | 105 | 90 | 495 (665) |
| 1221 - 1980 (1051 - 1810) | 125 | 110 | 535 (705) |
| 1981 - 2730 (1811 - 2560) | 150 | 135 | 585 (765) |

| Stroke length (Smax) [mm] | A [mm] | B [mm] | C [mm] |
|---|---|---|---|
| 2731 - 3490 (2561 - 3320) | 170 | 155 | 625 (795) |
| 3491 - 4240 (3321 - 4070) | 195 | 180 | 675 (845) |
| 4241 - 5000 (4071 - 4830) | 215 | 200 | 715 (885) |
| 5001 - 5500 (4831 - 5330) | 235 | 220 | 755 (925) |

Values between brackets = for units with long carriage

## Performance Specifications
for Units with Single Long Carriage (L)

| Parameter | | MLSM60D |
|---|---|---|
| Stroke length (Smax), maximum | [mm] | 4815 |
| Total length (L tot), maximum | [mm] | 5700 |
| Carriage length | [mm] | 450 |
| Dynamic load torque (My), maximum | [Nm] | 940 |
| Dynamic load torque (Mz), maximum | [Nm] | 940 |
| Weight | [kg] | 6,5 |

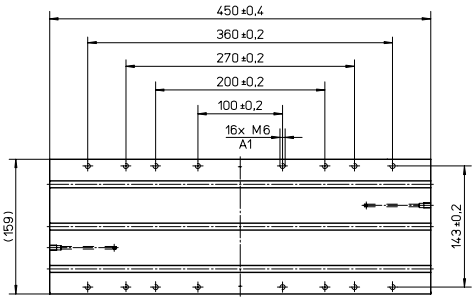


A1: depth 10

## Performance Specifications
for Units with Double Standard Carriage (Z)

| Parameter | | MLSM60D |
|---|---|---|
| Stroke length (Smax), maximum | [mm] | 4665 |
| Total length (L tot), maximum | [mm] | 5700 |
| Minimum distance between carriages (Lc) | [mm] | 320 |
| Dynamic load (Fy), maximum | [N] | 12000 |
| Dynamic load (Fz), maximum | [N] | 12000 |
| Dynamic load torque (My), maximum | [Nm] | L c[1] × 6 |
| Dynamic load torque (Mz), maximum | [Nm] | L c[1] × 6 |
| Force required to move second carriage | [N] | 27 |
| Total length (L tot) | [mm] | Smax + C + Lc |

[1] Value in mm

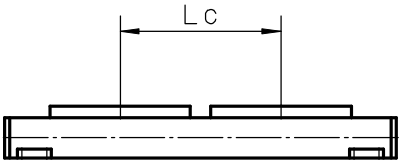

# MLSM80D

## Ball Screw Drive, Ball Guide

» Ordering key - see page 178
» Accessories - see page 117
» Additional data - see page 172

## General Specifications

| Parameter | MLSM80D |
|---|---|
| Profile size (w × h) [mm] | 240 × 85 |
| Type of screw | ball screw with double nuts |
| Carriage sealing system | plastic cover band |
| Screw supports | included in all units that require screw supports |
| Lubrication | central lubrication of all parts that require lubrication |
| Included accessories | 4 × mounting clamps |

## Performance Specifications

for Units with Single Standard Carriage (N)[1]

| Parameter | | MLSM80D |
|---|---|---|
| Stroke length (Smax), maximum | [mm] | 4810 |
| Total length (L tot), maximum | [mm] | 5700 |
| Linear speed, maximum | [m/s] | 2,0 |
| Acceleration, maximum | [m/s²] | 20 |
| Repeatability | [± mm] | 0,01 |
| Input speed, maximum | [rpm] | 3000 |
| Operation temperature limits | [°C] | 0 – 80 |
| Dynamic load (Fx), maximum<br>screw lead 5, 10, 20 mm<br>screw lead 40 mm | [N] | <br>12000<br>8000 |
| Dynamic load (Fy), maximum | [N] | 8000 |
| Dynamic load (Fz), maximum | [N] | 8000 |
| Dynamic load torque (Mx), maximum | [Nm] | 780 |
| Dynamic load torque (My), maximum | [Nm] | 900 |
| Dynamic load torque (Mz), maximum | [Nm] | 900 |
| Drive shaft force (Frd), maximum [2] | [N] | 700 |
| Input/drive shaft torque (Mta), maximum | [Nm] | 85 |
| Ball screw diameter ($d_0$) | [mm] | 32 |
| Ball screw lead (p) | [mm] | 5, 10, 20, 40 |
| Weight<br>of unit with zero stroke<br>of every 100 mm of stroke<br>of each carriage | [kg] | <br>29,5<br>2,7<br>11,5 |

[1] See next page for deviating values of units with other carriage types.
[2] Only relevant for units without RediMount flange.

## Carriage Idle Torque (M idle) [Nm]

| Input speed [rpm] | Screw lead [mm] | | | |
|---|---|---|---|---|
| | p = 5 | p = 10 | p = 20 | p = 40 |
| 150 | 1,6 | 2,2 | 2,5 | 2,8 |
| 1500 | 2,7 | 3,2 | 3,4 | 4,0 |
| 3000 | 3,2 | 4,0 | 4,2 | 4,5 |

M idle = the input torque needed to move the carriage with no load on it.

## Deflection of the Profile

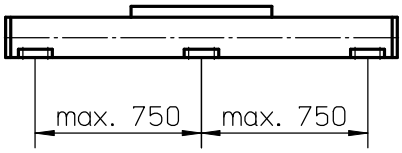


A mounting clamp must be installed at least every 750 mm to be able to operate at maximum load. Less clamps may be required if less load is being operated, see the additional technical data for more information.

## Definition of Forces

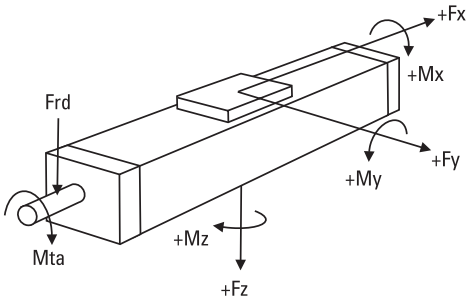

# MLSM80D

## Ball Screw Drive, Ball Guide

| Dimensions | Projection | Online Sizing & Selection! |
|---|---|---|
| METRIC | | www.LinearMotioneering.com |

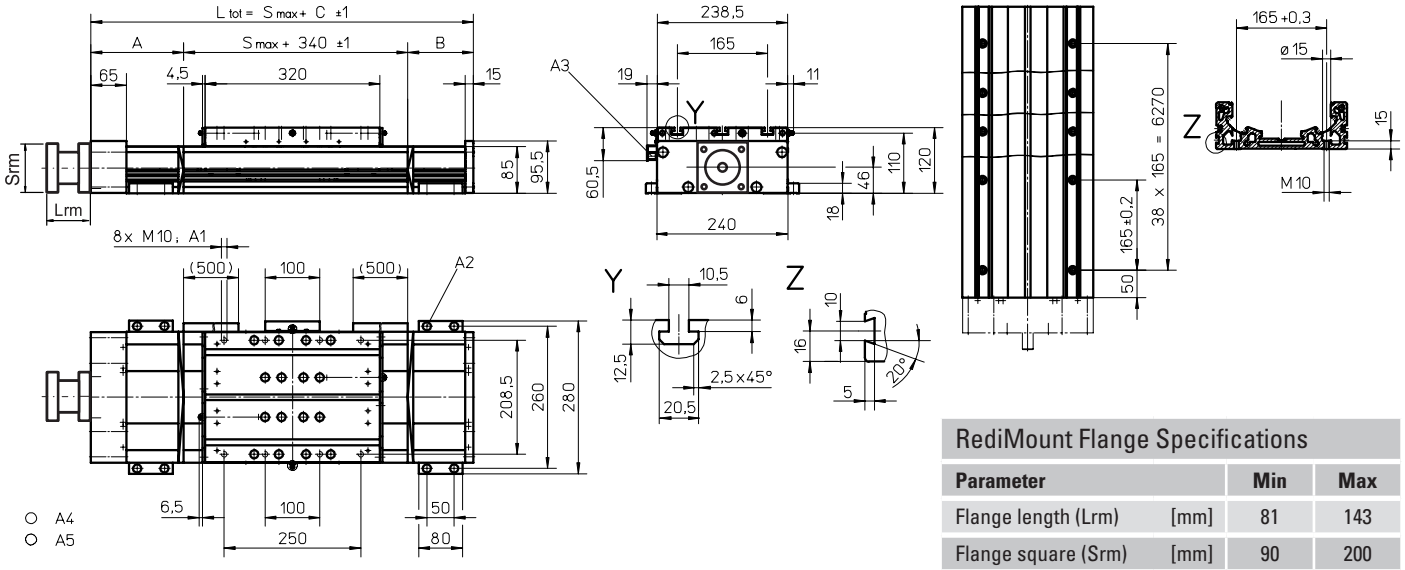


A1: depth 15
A2: socket cap screw ISO4762-M8×20 8.8
A3: ENF inductive sensor rail kit (optional - see page 150)
A4: tapered lubricating nipple to DIN71412 M8×1 on fixed-bearing side as standard feature
A5: can be changed over to one of the three alternative lubricating points by the customer

### RediMount Flange Specifications

| Parameter | | Min | Max |
|---|---|---|---|
| Flange length (Lrm) | [mm] | 81 | 143 |
| Flange square (Srm) | [mm] | 90 | 200 |
| Flange weight * | [kg] | 5,67 | |

* Max. weight including coupling and fastening screws

| Stroke length (Smax) [mm] | A [mm] | B [mm] | C [mm] |
|---|---|---|---|
| 0 - 750 (0 - 570) | 100 | 90 | 530 (710) |
| 751 - 1140 (571 - 960) | 130 | 120 | 590 (770) |
| 1141 - 1880 (961 - 1700) | 160 | 150 | 650 (830) |
| 1881 - 2620 (1701 - 2440) | 190 | 180 | 710 (890) |

| Stroke length (Smax) [mm] | A [mm] | B [mm] | C [mm] |
|---|---|---|---|
| 2621 - 3360 (2441 - 3180) | 220 | 210 | 770 (950) |
| 3361 - 4100 (3181 - 3920) | 250 | 240 | 830 (1010) |
| 4101 - 4840 (3921 - 4660) | 280 | 270 | 890 (1070) |
| 4841 - 5000 (4661 - 4820) | 310 | 300 | 950 (1130) |

Values between brackets = for units with long carriage

## Performance Specifications
for Units with Single Long Carriage (L)

| Parameter | | MLSM80D |
|---|---|---|
| Stroke length (Smax), maximum | [mm] | 4630 |
| Total length (L tot), maximum | [mm] | 5700 |
| Carriage length | [mm] | 500 |
| Dynamic load torque (My), maximum | [Nm] | 1750 |
| Dynamic load torque (Mz), maximum | [Nm] | 1750 |
| Weight | [kg] | 16 |

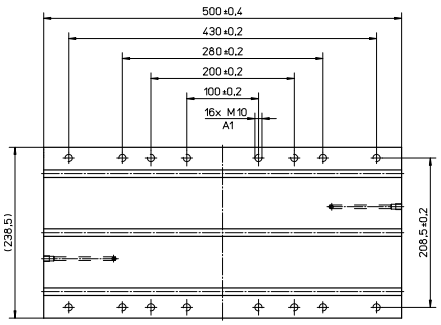


A1: depth 15

## Performance Specifications
for Units with Double Standard Carriage (Z)

| Parameter | | MLSM80D |
|---|---|---|
| Stroke length (Smax), maximum | [mm] | 4410 |
| Total length (L tot), maximum | [mm] | 5700 |
| Minimum distance between carriages (Lc) | [mm] | 400 |
| Dynamic load (Fy), maximum | [N] | 16000 |
| Dynamic load (Fz), maximum | [N] | 16000 |
| Dynamic load torque (My), maximum | [Nm] | L c[1] × 8 |
| Dynamic load torque (Mz), maximum | [Nm] | L c[1] ×8 |
| Force required to move second carriage | [N] | 35 |
| Total length (L tot) | [mm] | Smax + C + Lc |

[1] Value in mm

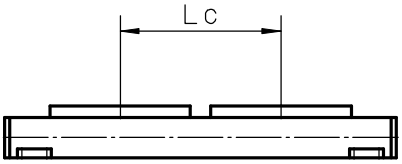

# M55

## Ball Screw Drive, Ball Guide

» Ordering key - see page 179
» Accessories - see page 117
» Additional data - see page 172

## General Specifications

| Parameter | M55 |
|---|---|
| Profile size (w × h) [mm] | 58 × 55 |
| Type of screw | ball screw with single nut |
| Carriage sealing system | self-adjusting steel cover band |
| Screw supports | number of screw supports to be specified by customer at order |
| Lubrication | lubrication of ball screw |
| Included accessories | none |

## Performance Specifications

for Units with Single Standard Carriage (A)[1]

| Parameter | | M55 |
|---|---|---|
| Stroke length (Smax), maximum | [mm] | 2712 |
| Total length (L tot), maximum | [mm] | 2975 |
| Linear speed, maximum | [m/s] | 1,6 |
| Acceleration, maximum | [m/s²] | 8 |
| Repeatability | [± mm] | 0,05 |
| Input speed, maximum | [rpm] | 3000 |
| Operation temperature limits | [°C] | -20 – 70 |
| Dynamic load (Fx), maximum | [N] | 1000 |
| Dynamic load (Fy), maximum | [N] | 900 |
| Dynamic load (Fz), maximum | [N] | 900 |
| Dynamic load torque (Mx), maximum | [Nm] | 9 |
| Dynamic load torque (My), maximum | [Nm] | 48 |
| Dynamic load torque (Mz), maximum | [Nm] | 48 |
| Drive shaft force (Frd), maximum [2] | [N] | 200 |
| Input/drive shaft torque (Mta), maximum | [Nm] | 12 |
| Screw diameter ($d_0$) | [mm] | 16 |
| Screw lead (p) | [mm] | 5, 10, 20 |
| Weight | [kg] | |
| of unit with zero stroke | | 3,90 |
| of every 100 mm of stroke | | 0,56 |
| of carriage | | 1,20 |
| of option single screw support | | 0,83 |
| of option double screw supports | | 1,88 |

[1] See next page for deviating values of units with other carriage types.
[2] Only relevant for units without RediMount flange.

## Carriage Idle Torque (M idle) [Nm]

| Input speed [rpm] | Screw lead [mm] | | |
|---|---|---|---|
| | p = 5 | p = 10 | p = 20 |
| 500 - no screw supports | 0,02 | 0,03 | 0,04 |
| 500 - with screw supports | 0,03 | 0,05 | 0,07 |

M idle = the input torque needed to move the carriage with no load on it.

## Deflection of the Profile

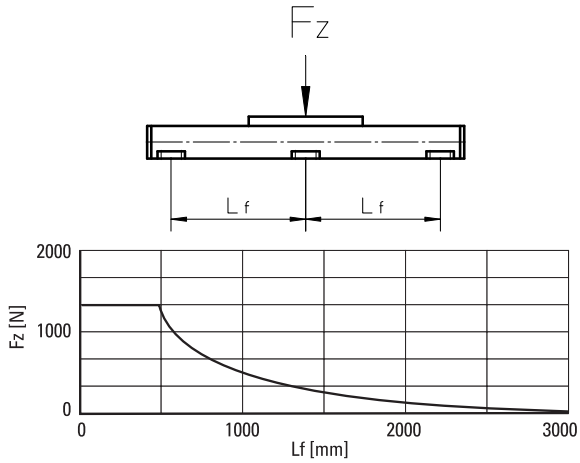


## Critical Speed

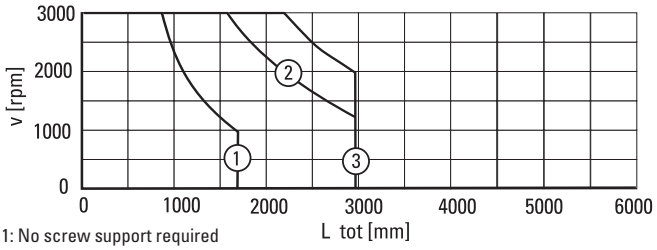


1: No screw support required
2: Single screw support required
3: Double screw supports required

## Definition of Forces

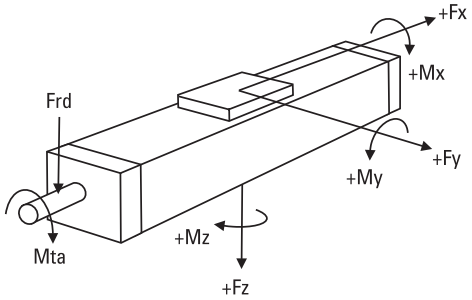

# M55

## Ball Screw Drive, Ball Guide

| Dimensions | Projection | Online Sizing & Selection! |
|---|---|---|
| METRIC | | www.LinearMotioneering.com |

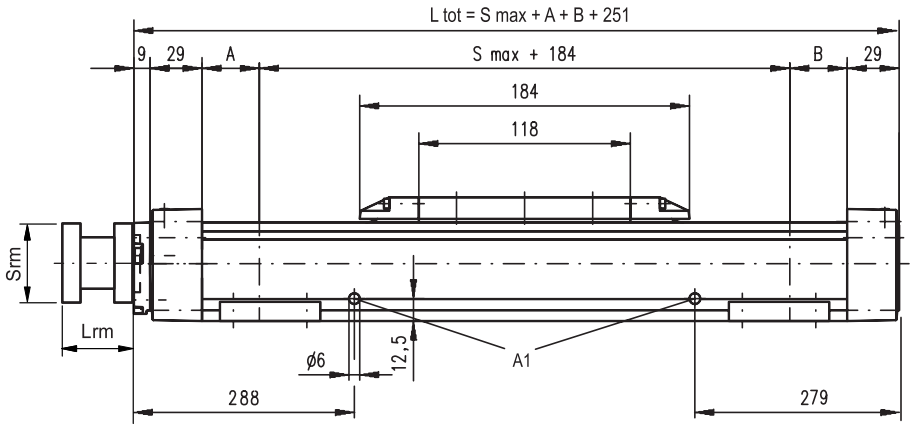


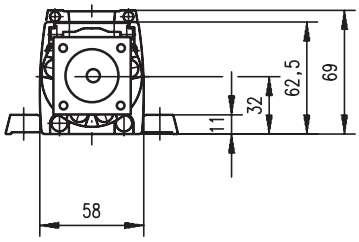


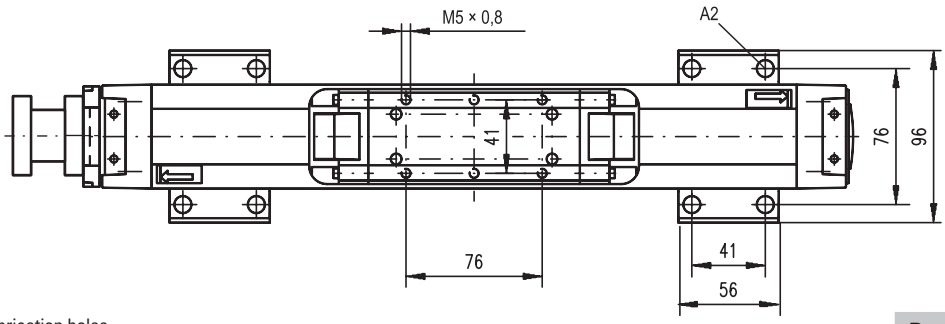


A1: lubrication holes
A2: ø9,5/ø5,5 for socket head cap screw M5

| Screw support configuration | A [mm] | B [mm] | Total length (L tot) [mm] |
|---|---|---|---|
| No screw support | 6 | 6 | L tot = Smax + A + B + 251 |
| Single screw support | 40 | 40 | L tot = Smax + A + B + 251 |
| Double screw supports | 92 | 92 | L tot = Smax + A + B + 251 |

### RediMount Flange Specifications

| Parameter | | Min | Max |
|---|---|---|---|
| Flange length (Lrm) | [mm] | 57 | 92 |
| Flange square (Srm) | [mm] | 60 | 139 |
| Flange weight * | [kg] | 1,84 | |

* Max. weight including coupling and fastening screws

## Performance Specifications

for Units with Double Standard Carriage (C)

| Parameter | | M55 |
|---|---|---|
| Stroke length (Smax), maximum | [mm] | 2512 |
| Total length (L tot), maximum | [mm] | 2975 |
| Minimum distance between carriages (Lc) | [mm] | 200 |
| Dynamic load (Fy), maximum | [N] | 1350 |
| Dynamic load (Fz), maximum | [N] | 1350 |
| Dynamic load torque (My), maximum | [Nm] | Lc[1] × 0,675 |
| Dynamic load torque (Mz), maximum | [Nm] | Lc[1] × 0,675 |
| Force required to move second carriage | [N] | 2 |
| Weight<br>of unit with zero stroke<br>of carriages | [kg] | <br>6,5<br>2,4 |

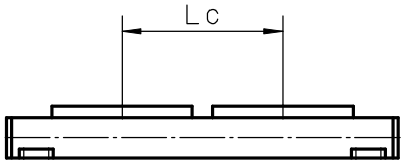


| Screw support configuration | A [mm] | B [mm] | Total length (L tot) [mm] |
|---|---|---|---|
| No screw support | 6 | 6 | L tot = Smax + A + B + Lc + 251 |
| Single screw support | 40 | 40 | L tot = Smax + A + B + Lc + 251 |
| Double screw supports | 92 | 92 | L tot = Smax + A + B + Lc + 251 |

# M75

## Ball Screw Drive, Ball Guide

» Ordering key - see page 179
» Accessories - see page 117
» Additional data - see page 172

## General Specifications

| Parameter | M75 |
|---|---|
| Profile size (w × h) [mm] | 86 × 75 |
| Type of screw | ball screw with single nut |
| Carriage sealing system | self-adjusting steel cover band |
| Screw supports | number of screw supports to be specified by customer at order |
| Lubrication | lubrication of ball screw |
| Included accessories | none |

## Performance Specifications

for Units with Single Standard Carriage (A)[1]

| Parameter | | M75 |
|---|---|---|
| Stroke length (Smax), maximum | [mm] | |
| screw lead 5, 20 mm | | 3772 |
| screw lead 12,7 mm | | 2665 |
| Total length (L tot), maximum | [mm] | |
| screw lead 5, 20 mm | | 4075 |
| screw lead 12,7 mm | | 2968 |
| Linear speed, maximum | [m/s] | 1,0 |
| Acceleration, maximum | [m/s²] | 8 |
| Repeatability | [± mm] | 0,05 |
| Input speed, maximum | [rpm] | 3000 |
| Operation temperature limits | [°C] | -20 – 70 |
| Dynamic load (Fx), maximum | [N] | 2500 |
| Dynamic load (Fy), maximum | [N] | 2000 |
| Dynamic load (Fz), maximum | [N] | 2000 |
| Dynamic load torque (Mx), maximum | [Nm] | 18 |
| Dynamic load torque (My), maximum | [Nm] | 130 |
| Dynamic load torque (Mz), maximum | [Nm] | 130 |
| Drive shaft force (Frd), maximum [2] | [N] | 600 |
| Input/drive shaft torque (Mta), maximum | [Nm] | 30 |
| Screw diameter (d0) | [mm] | 20 |
| Screw lead (p) | [mm] | 5, 12,7, 20 |
| Weight | [kg] | |
| of unit with zero stroke | | 6,90 |
| of every 100 mm of stroke | | 1,05 |
| of carriage | | 2,50 |
| of option single screw support | | 1,70 |
| of option double screw supports | | 3,58 |

[1] See next page for deviating values of units with other carriage types.
[2] Only relevant for units without RediMount flange.

## Carriage Idle Torque (M idle) [Nm]

| Input speed [rpm] | Screw lead [mm] | | |
|---|---|---|---|
| | p = 5 | p = 12,7 | p = 20 |
| 500 - no screw supports | 0,04 | 0,1 | 0,16 |
| 500 - with screw supports | 0,06 | 0,12 | 0,2 |

M idle = the input torque needed to move the carriage with no load on it.

## Deflection of the Profile

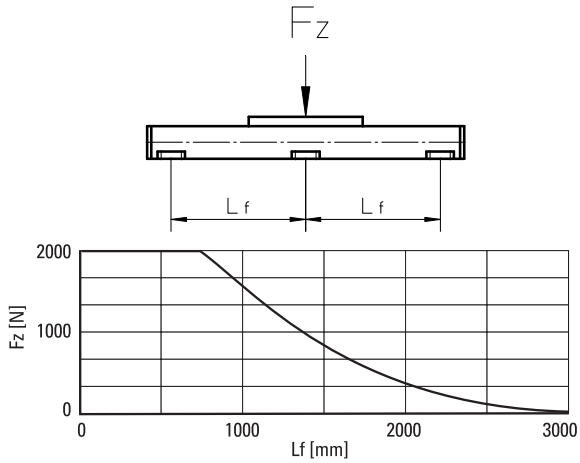


## Critical Speed

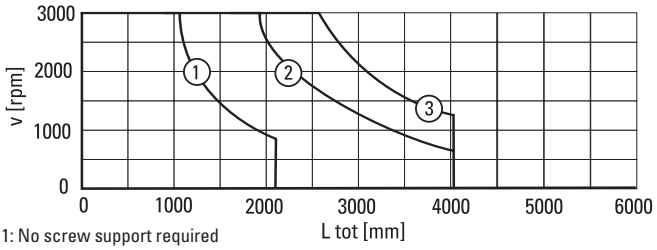


1: No screw support required
2: Single screw support required
3: Double screw supports required

## Definition of Forces

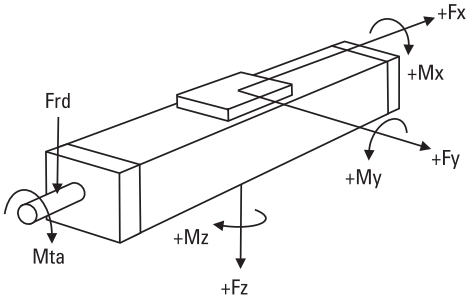

# M75

## Ball Screw Drive, Ball Guide

| Dimensions | Projection | Online Sizing & Selection! |
|---|---|---|
| METRIC | | www.LinearMotioneering.com |

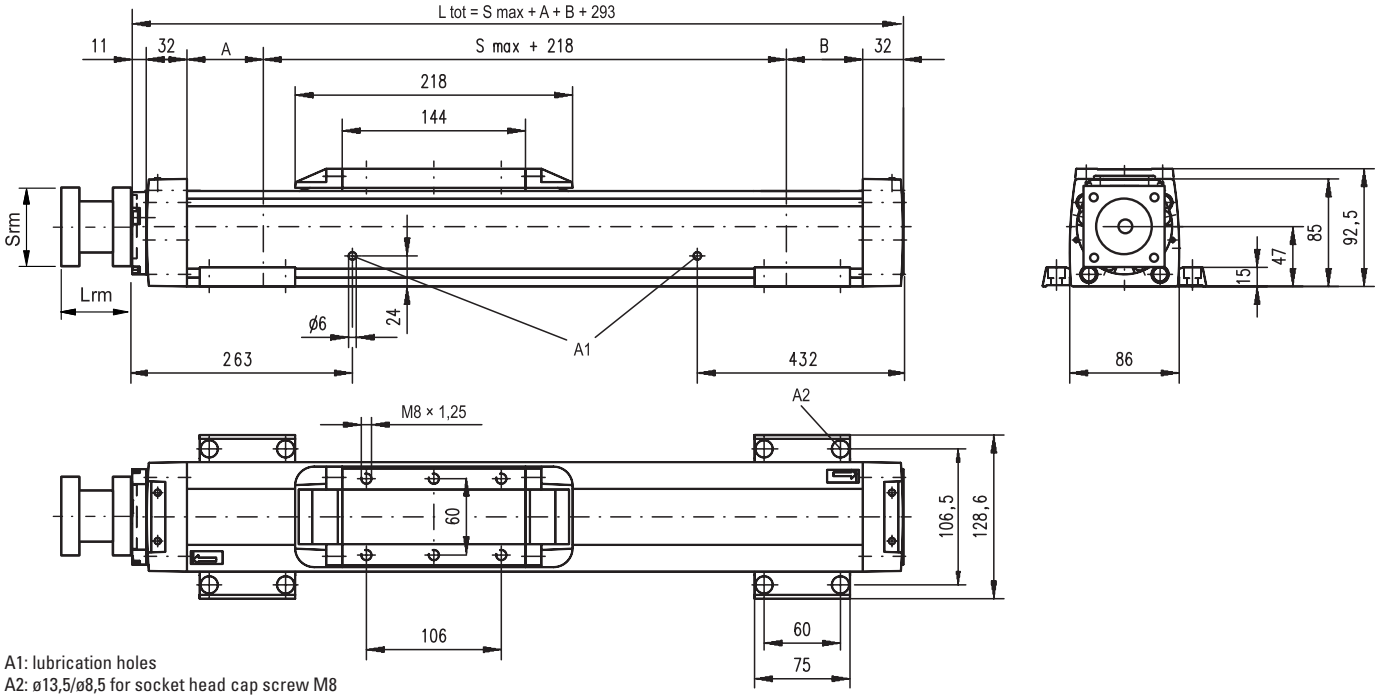


A1: lubrication holes
A2: ø13,5/ø8,5 for socket head cap screw M8

| Screw support configuration | A [mm] | B [mm] | Total length (L tot) [mm] |
|---|---|---|---|
| No screw support | 5 | 5 | L tot = Smax + A + B + 293 |
| Single screw support | 60 | 60 | L tot = Smax + A + B + 293 |
| Double screw supports | 126 | 126 | L tot = Smax + A + B + 293 |

### RediMount Flange Specifications

| Parameter | | Min | Max |
|---|---|---|---|
| Flange length (Lrm) | [mm] | 81 | 143 |
| Flange square (Srm) | [mm] | 90 | 200 |
| Flange weight * | [kg] | 5,60 | |

* Max. weight including coupling and fastening screws

## Performance Specifications

for Units with Double Standard Carriage (C)

| Parameter | | M75 |
|---|---|---|
| Stroke length (Smax), maximum<br>screw lead 5, 20 mm<br>screw lead 12,7 mm | [mm] | <br>3522<br>2415 |
| Total length (L tot), maximum<br>screw lead 5, 20 mm<br>screw lead 12,7 mm | [mm] | <br>4075<br>2968 |
| Minimum distance between carriages (Lc) | [mm] | 250 |
| Dynamic load (Fy), maximum | [N] | 3000 |
| Dynamic load (Fz), maximum | [N] | 3000 |
| Dynamic load torque (My), maximum | [Nm] | Lc[1] × 1,5 |
| Dynamic load torque (Mz), maximum | [Nm] | Lc[1] × 1,5 |
| Force required to move second carriage | [N] | 2 |
| Weight<br>of unit with zero stroke<br>of carriages | [kg] | <br>12,2<br>5,0 |

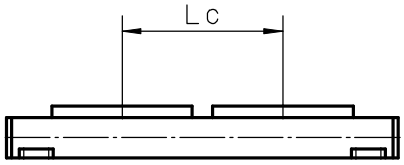


| Screw support configuration | A [mm] | B [mm] | Total length (L tot) [mm] |
|---|---|---|---|
| No screw support | 5 | 5 | L tot = Smax + A + B + Lc + 293 |
| Single screw support | 60 | 60 | L tot = Smax + A + B + Lc + 293 |
| Double screw supports | 126 | 126 | L tot = Smax + A + B + Lc + 293 |

[1] Value in mm

# M100

## Ball Screw Drive, Ball Guide

» Ordering key - see page 179
» Accessories - see page 117
» Additional data - see page 172

## General Specifications

| Parameter | M100 |
|---|---|
| Profile size (w × h) [mm] | 108 × 100 |
| Type of screw | ball screw with single nut |
| Carriage sealing system | self-adjusting steel cover band |
| Screw supports | number of screw supports to be specified by customer at order |
| Lubrication | lubrication of ball screw |
| Included accessories | none |

## Performance Specifications

for Units with Single Standard Carriage (A)[1]

| Parameter | | M100 |
|---|---|---|
| Stroke length (Smax), maximum | [mm] | |
| screw lead 5, 10 mm | | 5578 |
| screw lead 25 mm | | 4378 |
| Total length (L tot), maximum | [mm] | |
| screw lead 5, 10 mm | | 5974 |
| screw lead 25 mm | | 4774 |
| Linear speed, maximum | [m/s] | 1,25 |
| Acceleration, maximum | [m/s²] | 8 |
| Repeatability | [± mm] | 0,05 |
| Input speed, maximum | [rpm] | 3000 |
| Operation temperature limits | [°C] | -20 – 70 |
| Dynamic load (Fx), maximum | [N] | 5000 |
| Dynamic load (Fy), maximum | [N] | 5000 |
| Dynamic load (Fz), maximum | [N] | 5000 |
| Dynamic load torque (Mx), maximum | [Nm] | 60 |
| Dynamic load torque (My), maximum | [Nm] | 400 |
| Dynamic load torque (Mz), maximum | [Nm] | 400 |
| Drive shaft force (Frd), maximum[2] | [N] | 1000 |
| Input/drive shaft torque (Mta), maximum | [Nm] | 45 |
| Screw diameter (d0) | [mm] | 25 |
| Screw lead (p) | [mm] | 5, 10, 25 |
| Weight | [kg] | |
| of unit with zero stroke | | 14,3 |
| of every 100 mm of stroke | | 1,72 |
| of carriage | | 4,00 |
| of option single screw support | | 1,86 |
| of option double screw supports | | 4,42 |

[1] See next page for deviating values of units with other carriage types.
[2] Only relevant for units without RediMount flange.

## Carriage Idle Torque (M idle) [Nm]

| Input speed [rpm] | Screw lead [mm] | | |
|---|---|---|---|
| | p = 5 | p = 10 | p = 25 |
| 500 - no screw supports | 0,08 | 0,14 | 0,32 |
| 500 - with screw supports | 0,1 | 0,16 | 0,37 |

M idle = the input torque needed to move the carriage with no load on it.

## Deflection of the Profile

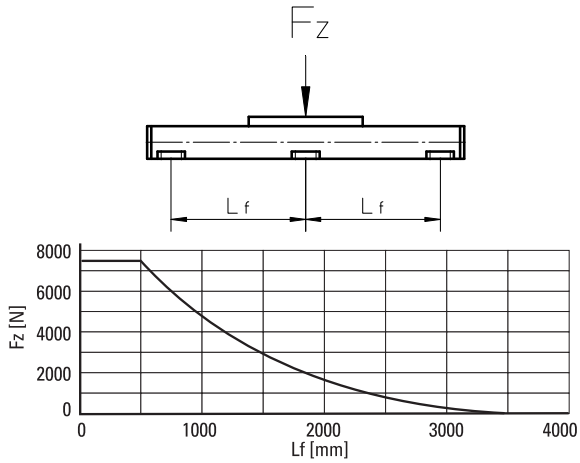


## Critical Speed

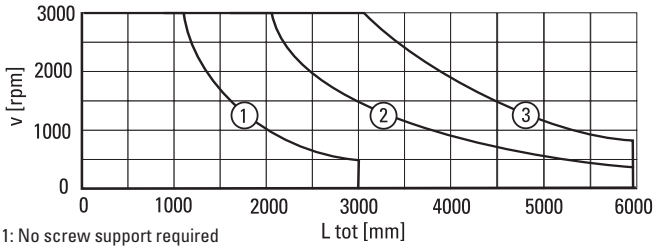


1: No screw support required
2: Single screw support required
3: Double screw supports required

## Definition of Forces

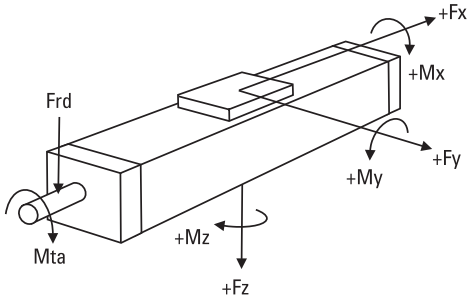

# M100

## Ball Screw Drive, Ball Guide

| Dimensions | Projection | Online Sizing & Selection! |
|---|---|---|
| METRIC | | www.LinearMotioneering.com |

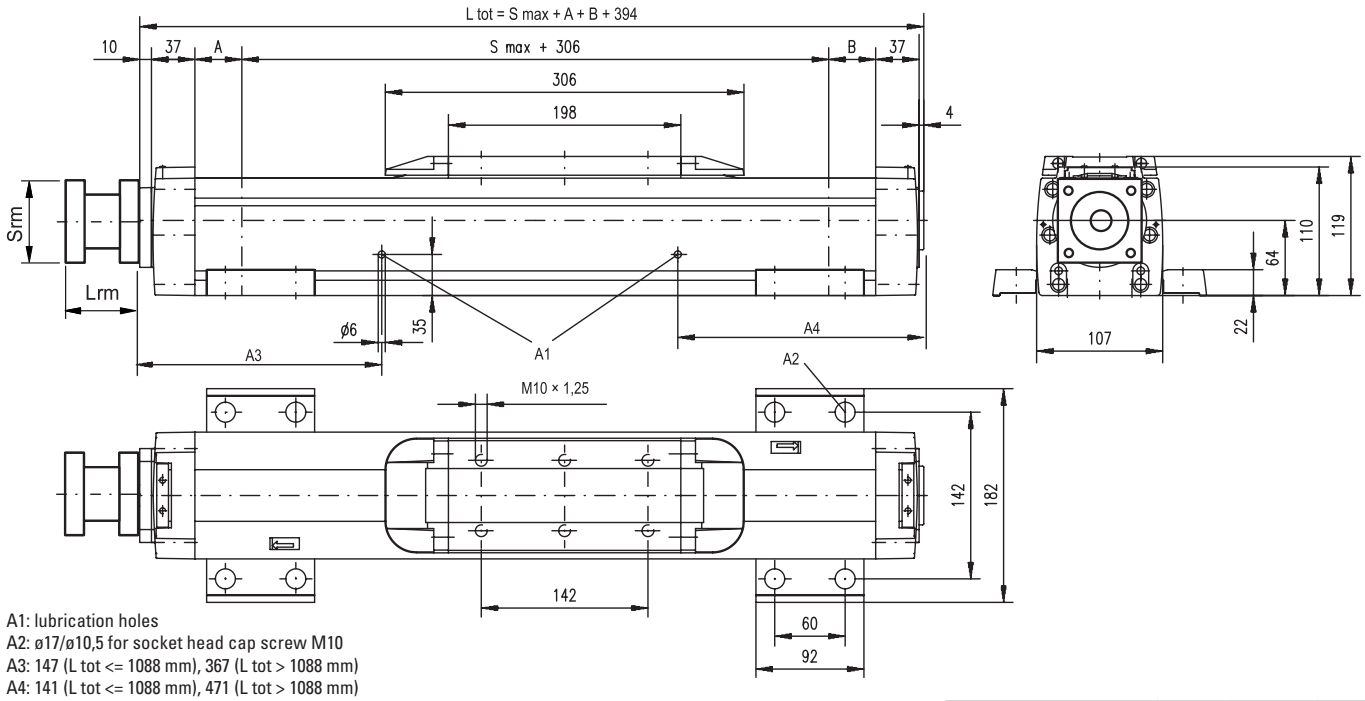


A1: lubrication holes
A2: ø17/ø10,5 for socket head cap screw M10
A3: 147 (L tot <= 1088 mm), 367 (L tot > 1088 mm)
A4: 141 (L tot <= 1088 mm), 471 (L tot > 1088 mm)

| Screw support configuration | A [mm] | B [mm] | Total length (L tot) [mm] |
|---|---|---|---|
| No screw support | 1 | 1 | L tot = Smax + A + B + 394 |
| Single screw support | 31 | 31 | L tot = Smax + A + B + 394 |
| Double screw supports | 86 | 86 | L tot = Smax + A + B + 394 |

### RediMount Flange Specifications

| Parameter | | Min | Max |
|---|---|---|---|
| Flange length (Lrm) | [mm] | 81 | 143 |
| Flange square (Srm) | [mm] | 90 | 200 |
| Flange weight * | [kg] | 5,60 | |

* Max. weight including coupling and fastening screws

## Performance Specifications

for Units with Double Standard Carriage (C)

| Parameter | | M100 |
|---|---|---|
| Stroke length (Smax), maximum<br>screw lead 5, 10 mm<br>screw lead 25 mm | [mm] | <br>5228<br>4028 |
| Total length (L tot), maximum<br>screw lead 5, 10 mm<br>screw lead 25 mm | [mm] | <br>5974<br>4774 |
| Minimum distance between carriages (Lc) | [mm] | 350 |
| Dynamic load (Fy), maximum | [N] | 7500 |
| Dynamic load (Fz), maximum | [N] | 7500 |
| Dynamic load torque (My), maximum | [Nm] | Lc[1] × 3,75 |
| Dynamic load torque (Mz), maximum | [Nm] | Lc[1] × 3,75 |
| Force required to move second carriage | [N] | 2 |
| Weight<br>of unit with zero stroke<br>of carriages | [kg] | <br>25,3<br>8,0 |

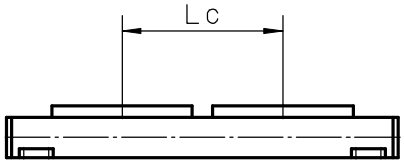


| Screw support configuration | A [mm] | B [mm] | Total length (L tot) [mm] |
|---|---|---|---|
| No screw support | 1 | 1 | L tot = Smax + A + B + Lc + 394 |
| Single screw support | 31 | 31 | L tot = Smax + A + B + Lc + 394 |
| Double screw supports | 86 | 86 | L tot = Smax + A + B + Lc + 394 |

[1] Value in mm

# 2HB10

## Ball Screw Drive, Ball Guide

» Ordering key - see page 180
» Accessories - see page 117

## General Specifications

| Parameter | 2HB10 |
|---|---|
| Profile size (w × h) [mm] | 100 × 60 |
| Type of screw | ball screw |
| Carriage sealing system | none (optional shroud or bellows) |
| Screw supports | none |
| Lubrication | lubrication of screw and guides |
| Included accessories | RediMount™ kit |

## Performance Specifications

| Parameter | | 2HB10 |
|---|---|---|
| Stroke length (Smax), maximum | [mm] | 1375 |
| Linear speed, maximum | [m/s] | 0,47 |
| Acceleration, maximum | [m/s²] | 9,8 |
| Repeatability | [± mm] | 0,005 |
| Input speed, maximum | [rpm] | 2800 |
| Operation temperature limits | [°C] | -20 – 80 |
| Dynamic load (Fx), maximum | [N] | 2100 |
| Dynamic load (Fy), maximum | [N] | 8000 |
| Dynamic load (Fz), maximum | [N] | 8000 |
| Dynamic load torque (Mx), maximum | [Nm] | 279 |
| Dynamic load torque (My), maximum | [Nm] | 216 |
| Dynamic load torque (Mz), maximum | [Nm] | 216 |
| Drive shaft force (Frd), maximum [1] | [N] | 533 |
| Input/drive shaft torque (Mta), maximum | [Nm] | 1,86 |
| Ball screw diameter ($d_0$) | [mm] | 16 |
| Ball screw lead (p) | [mm] | 5, 10 |
| Weight | [kg] | |
| of unit with zero stroke | | 2,59 |
| of every 100 mm of stroke | | 0,69 |
| of each carriage | | 0,82 |

[1] Only relevant for units without RediMount flange.

## Deflection of the Profile

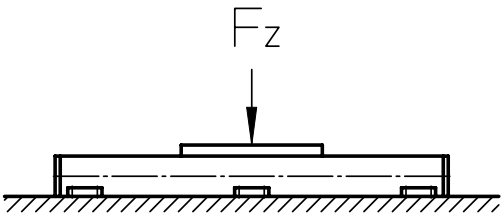


The unit must be continuously supported by a machined surface under its entire length.

## Definition of Forces

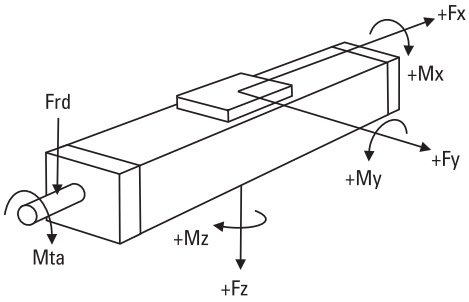

# 2HB10

## Ball Screw Drive, Ball Guide

| Dimensions | Projection | Online Sizing & Selection! |
|---|---|---|
| METRIC | | www.LinearMotioneering.com |

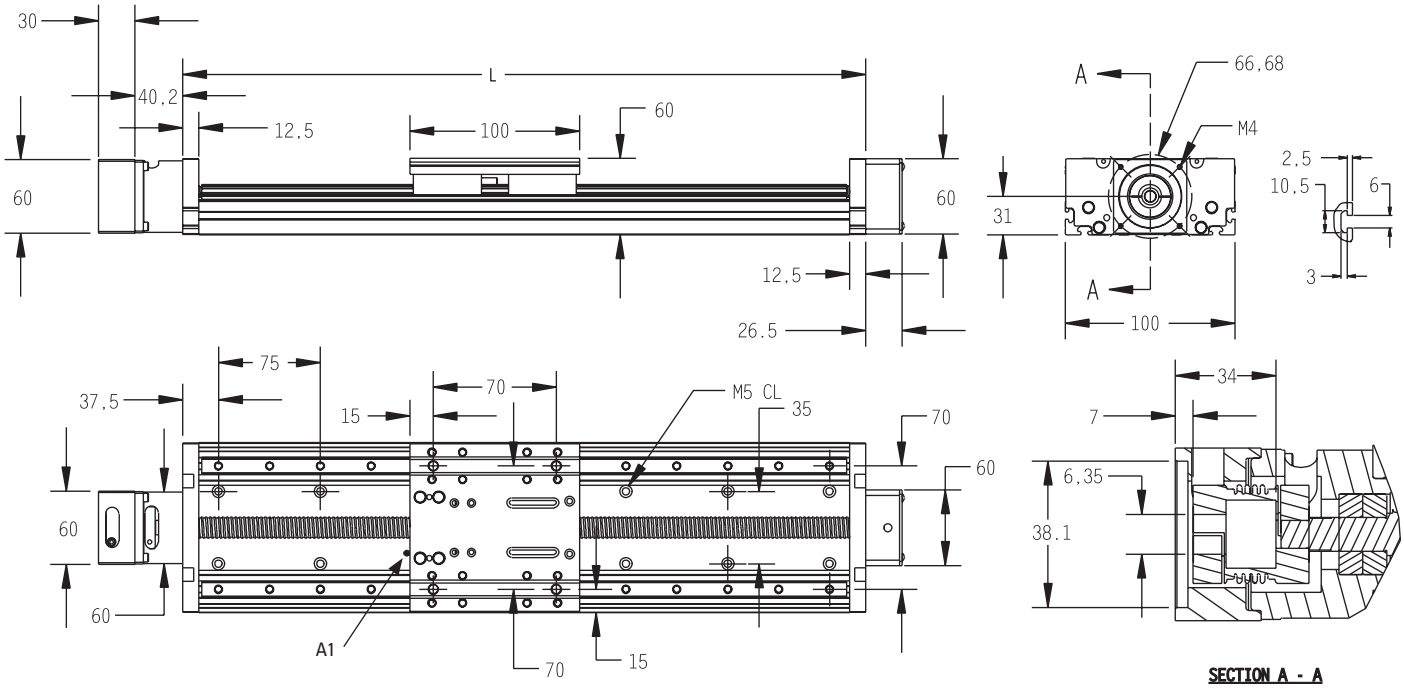


A1: lubrication nipple (using the unit with the nipple mounted makes the stroke 10 mm shorter).

Standard NEMA23 motor dimensions are shown. Other mounting sizes are available and easily configured. Please see www.LinearMotioneering.com for details.

| Ordering Length (L) and Maximum Stroke (Smax) |
|---|
| L = Smax + 125 |

# 2HB20

## Ball Screw Drive, Ball Guide

» Ordering key - see page 180
» Accessories - see page 117

## General Specifications

| Parameter | 2HB20 |
|---|---|
| Profile size (w × h) [mm] | 200 × 90 |
| Type of screw | ball screw |
| Carriage sealing system | none (optional shroud or bellows) |
| Screw supports | none |
| Lubrication | lubrication of screw and guides |
| Included accessories | RediMount™ kit |

## Performance Specifications

| Parameter | | 2HB20 |
|---|---|---|
| Stroke length (Smax), maximum | [mm] | 2760 |
| Linear speed, maximum | [m/s] | 0,75 |
| Acceleration, maximum | [m/s²] | 9,8 |
| Repeatability | [± mm] | 0,005 |
| Input speed, maximum | [rpm] | 1800 |
| Operation temperature limits | [°C] | -20 – 80 |
| Dynamic load (Fx), maximum | [N] | 4697 |
| Dynamic load (Fy), maximum | [N] | 34000 |
| Dynamic load (Fz), maximum | [N] | 34000 |
| Dynamic load torque (Mx), maximum | [Nm] | 2463 |
| Dynamic load torque (My), maximum | [Nm] | 1903 |
| Dynamic load torque (Mz), maximum | [Nm] | 1903 |
| Drive shaft force (Frd), maximum [1] | [N] | 533 |
| Input/drive shaft torque (Mta), maximum | [Nm] | 15,5 |
| Ball screw diameter ($d_0$) | [mm] | 25 |
| Ball screw lead (p) | [mm] | 5, 10, 25 |
| Weight | [kg] | |
| of unit with zero stroke | | 13,32 |
| of every 100 mm of stroke | | 1,70 |
| of each carriage | | 4,47 |

[1] Only relevant for units without RediMount flange.

## Deflection of the Profile

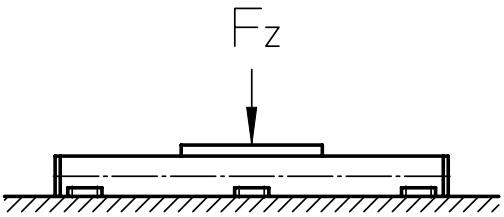


The unit must be continuously supported by a machined surface under its entire length.

## Definition of Forces

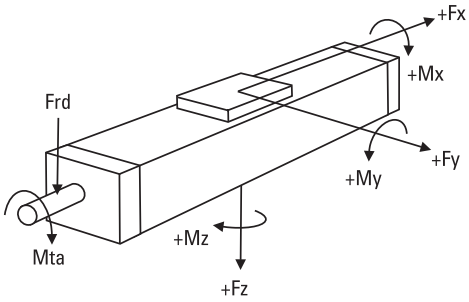

# 2HB20

## Ball Screw Drive, Ball Guide

| Dimensions | Projection | Online Sizing & Selection! |
|---|---|---|
| METRIC | | www.LinearMotioneering.com |

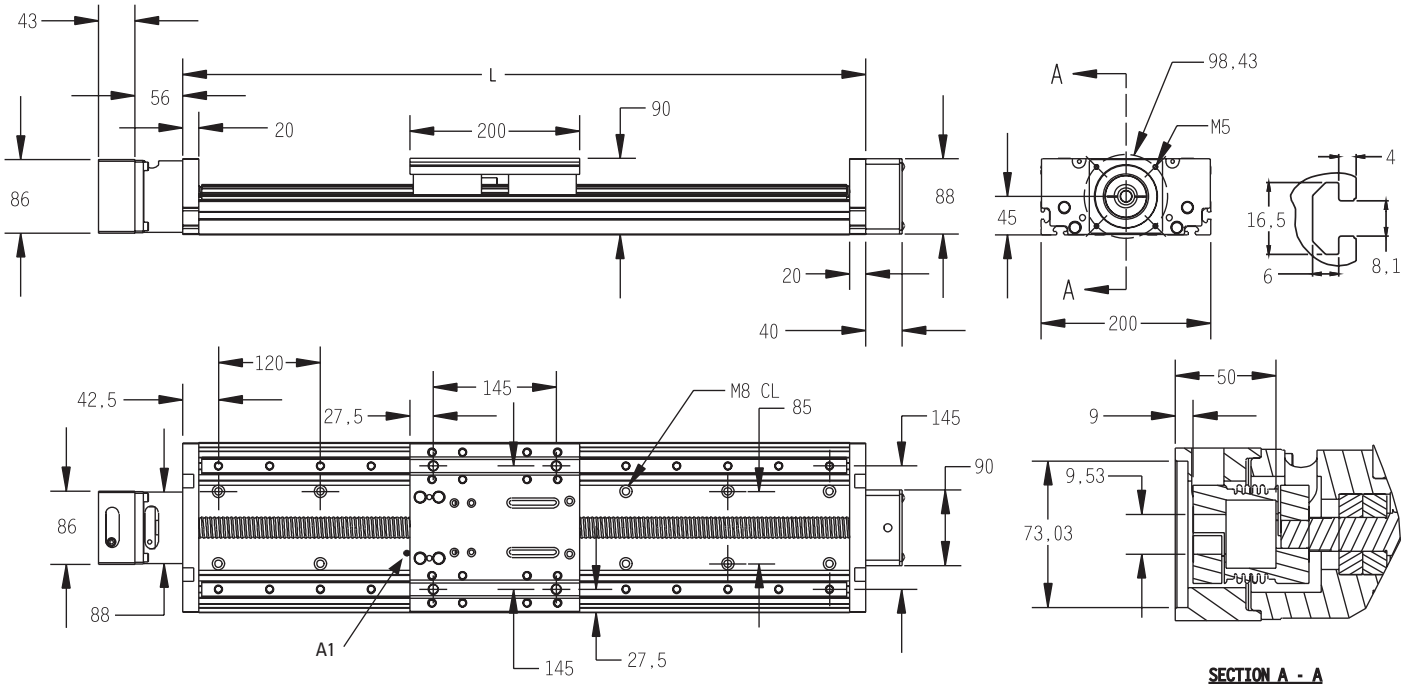


A1: lubrication nipple (using the unit with the nipple mounted makes the stroke 10 mm shorter).

Standard NEMA23 motor dimensions are shown. Other mounting sizes are available and easily configured. Please see www.LinearMotioneering.com for details.

| Ordering Length (L) and Maximum Stroke (Smax) |
|---|
| L = Smax + 240 |

# 2RB12

## Ball Screw Drive, Ball Guide

» Ordering key - see page 181
» Accessories - see page 117

## General Specifications

| Parameter | 2RB12 |
|---|---|
| Profile size (w × h) [mm] [1] | 130 × 40 |
| Type of screw | ball screw |
| Carriage sealing system | none (optional bellows) |
| Screw supports | none |
| Lubrication | lubrication of screws and guides |
| Included accessories | RediMount™ kit |

[1] Base width × carriage height.

## Performance Specifications

| Parameter | | 2RB12 |
|---|---|---|
| Stroke length (Smax), maximum | [mm] | 1951 |
| Linear speed, maximum | [m/s] | 0,47 |
| Acceleration, maximum | [m/s²] | 9,8 |
| Repeatability | [± mm] | 0,005 |
| Accuracy | [± mm] | 0,025 / 300 mm |
| Input speed, maximum | [rpm] | 2800 |
| Operation temperature limits | [°C] | -20 – 80 |
| Dynamic load (Fx), maximum | [N] | 2100 |
| Dynamic load (Fy), maximum | [N] | 880 |
| Dynamic load (Fz), maximum | [N] | 1760 |
| Dynamic load torque (Mx), maximum | [Nm] | 65,5 |
| Dynamic load torque (My), maximum | [Nm] | 76,8 |
| Dynamic load torque (Mz), maximum | [Nm] | 38,4 |
| Drive shaft force (Frd), maximum [1] | [N] | 533 |
| Input/drive shaft torque (Mta), maximum | [Nm] | 1,86 |
| Ball screw diameter ($d_0$) | [mm] | 16 |
| Ball screw lead (p) | [mm] | 5, 10 |
| Weight | [kg] | |
| of unit with zero stroke | | 3,88 |
| of every 100 mm of stroke | | 0,93 |
| of each carriage | | 1,32 |

[1] Only relevant for units without RediMount flange.

## Deflection of the Profile

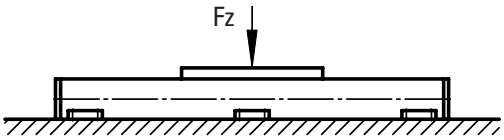


The unit must be continuously supported by a machined surface under its entire length.

## Definition of Forces

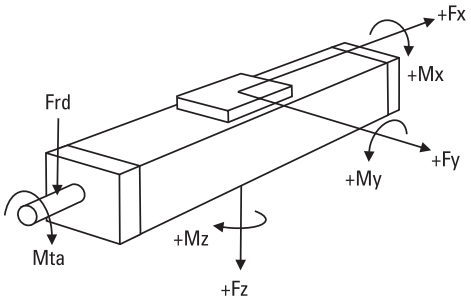

# 2RB12

## Ball Screw Drive, Ball Guide

| Dimensions | Projection | Online Sizing & Selection! |
|---|---|---|
| METRIC | | www.LinearMotioneering.com |

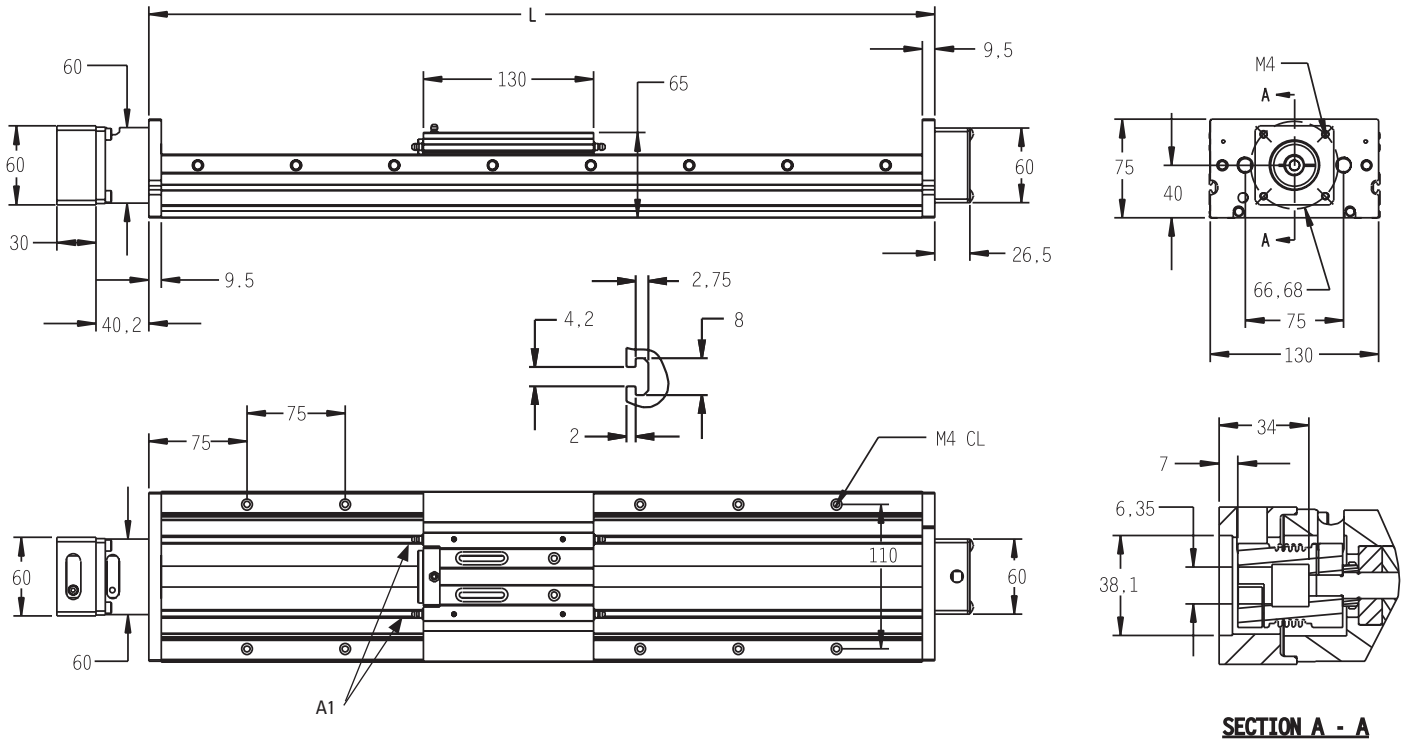


A1: lubrication nipples (using the unit with the nipples mounted makes the stroke 10 mm shorter).

Standard NEMA23 motor dimensions are shown. Other mounting sizes are available and easily configured. Please see www.LinearMotioneering.com for details.

| Ordering Length (L) and Maximum Stroke (Smax) |
|---|
| L = Smax + 149 |

# 2RB16

## Ball Screw Drive, Ball Guide

» Ordering key - see page 181
» Accessories - see page 117

## General Specifications

| Parameter | 2RB16 |
|---|---|
| Profile size (w × h) [mm] [1] | 160 × 48 |
| Type of screw | ball screw |
| Carriage sealing system | none (optional bellows) |
| Screw supports | none |
| Lubrication | lubrication of screws and guides |
| Included accessories | RediMount™ kit |

[1] Base width × carriage height.

## Performance Specifications

| Parameter | | 2RB16 |
|---|---|---|
| Stroke length (Smax), maximum | [mm] | 2815 |
| Linear speed, maximum | [m/s] | 0,73 |
| Acceleration, maximum | [m/s²] | 9,8 |
| Repeatability | [± mm] | 0,005 |
| Accuracy | [± mm] | 0,025 / 300 mm |
| Input speed, maximum | [rpm] | 2200 |
| Operation temperature limits | [°C] | -20 – 80 |
| Dynamic load (Fx), maximum | [N] | 2998 |
| Dynamic load (Fy), maximum | [N] | 2588 |
| Dynamic load (Fz), maximum | [N] | 5176 |
| Dynamic load torque (Mx), maximum | [Nm] | 243 |
| Dynamic load torque (My), maximum | [Nm] | 299 |
| Dynamic load torque (Mz), maximum | [Nm] | 150 |
| Drive shaft force (Frd), maximum [1] | [N] | 533 |
| Input/drive shaft torque (Mta), maximum | [Nm] | 2,66 |
| Ball screw diameter ($d_0$) | [mm] | 20 |
| Ball screw lead (p) | [mm] | 5, 10, 20 |
| Weight | [kg] | |
| of unit with zero stroke | | 6,17 |
| of every 100 mm of stroke | | 1,44 |
| of each carriage | | 2,25 |

[1] Only relevant for units without RediMount flange.

## Deflection of the Profile

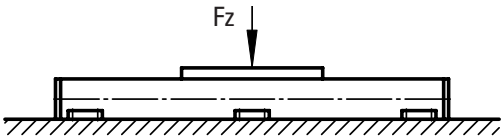


The unit must be continuously supported by a machined surface under its entire length.

## Definition of Forces

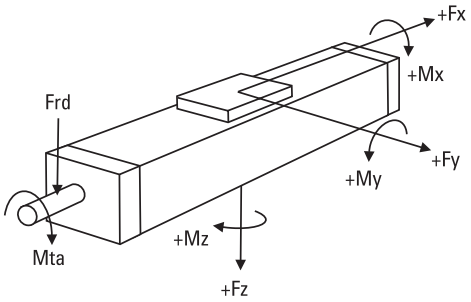

# 2RB16

## Ball Screw Drive, Ball Guide

| Dimensions | Projection | Online Sizing & Selection! |
|---|---|---|
| METRIC | | www.LinearMotioneering.com |

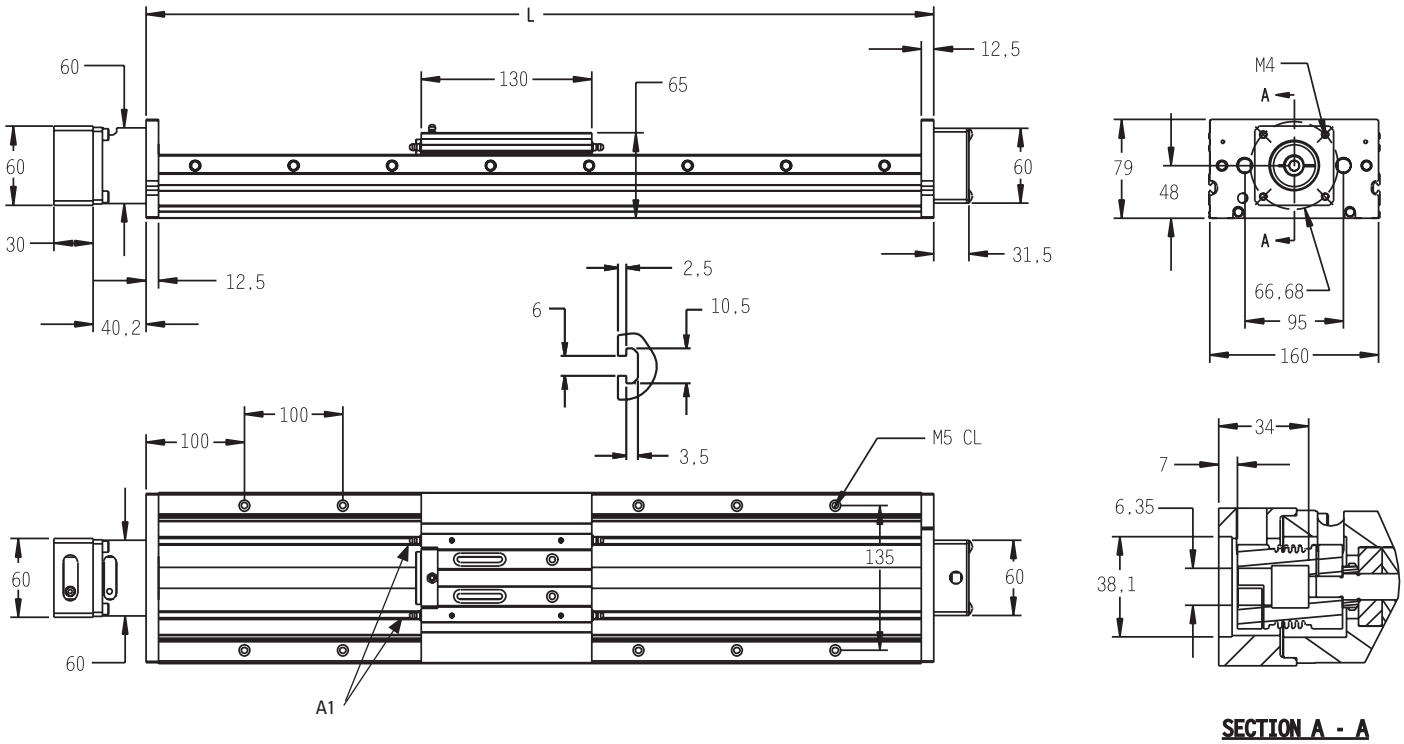


A1: lubrication nipples (using the unit with the nipples mounted makes the stroke 10 mm shorter).

Standard NEMA23 motor dimensions are shown. Other mounting sizes are available and easily configured. Please see www.LinearMotioneering.com for details.

| Ordering Length (L) and Maximum Stroke (Smax) |
|---|
| L = Smax + 185 |

# 2DB08

## Lead Screw Drive, Ball Guide – Inch Interface

» Ordering key - see page 182
» Accessories - see page 117

## General Specifications

| Parameter | 2DB08 |
|---|---|
| Profile size (w × h) [inch] | 4.50 × 1.625 |
| Type of screw | lead screw |
| Carriage sealing system | none (optional bellows) |
| Screw supports | none |
| Lubrication | lubrication of screws and guides |
| Included accessories | RediMount™ kit |

## Performance Specifications

| Parameter | | 2DB08 |
|---|---|---|
| Stroke length (Smax), maximum | [inch] | 41 |
| Linear speed, maximum | [inch/sec] | 33.3 |
| Acceleration, maximum | [inch/s²] | 385 |
| Repeatability | [± inch] | 0.0002 |
| Accuracy | [± inch] | 0.007 / 11.81 in |
| Input speed, maximum | [rpm] | 2000 |
| Operation temperature limits | [°F] | -4 – 176 |
| Dynamic load (Fx), maximum | [lbs] | 20 |
| Dynamic load (Fy), maximum | [lbs] | 168 |
| Dynamic load (Fz), maximum | [lbs] | 336 |
| Dynamic load torque (Mx), maximum | [lbf-in] | 500 |
| Dynamic load torque (My), maximum | [lbf-in] | 500 |
| Dynamic load torque (Mz), maximum | [lbf-in] | 250 |
| Drive shaft force (Frd), maximum [1] | [lbf] | 50 |
| Input/drive shaft torque (Mta), maximum | [lbf-in] | 3.54 |
| Lead screw diameter (d0) | [inch] | 0.375 |
| Lead screw lead (p) | [inch] | 0.1, 0.25, 0.5, 0.75, 1 |
| Weight | [lb] | |
| of unit with zero stroke | | 5.93 |
| of every 100 mm of stroke | | 1.16 |
| of each carriage | | 1.89 |

[1] With radial mount option only

## Deflection of the Profile

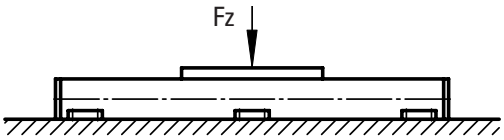


The unit must be continuously supported by a machined surface under its entire length.

## Definition of Forces

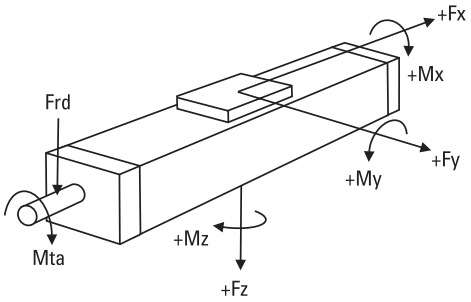

# 2DB08

| Dimensions | Projection | Online Sizing & Selection! |
|---|---|---|
| INCH | | www.LinearMotioneering.com |

## Lead Screw Drive, Ball Guide – Inch Interface

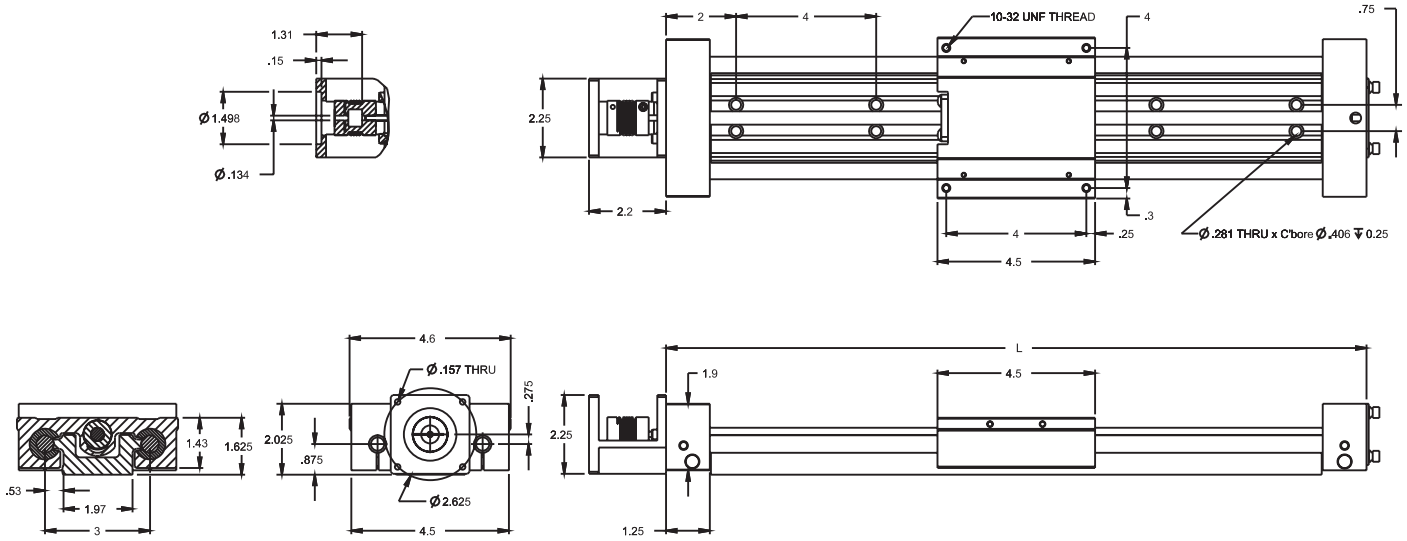


Standard NEMA23 motor dimensions are shown. Other mounting sizes are available and easily configured. Please see www.LinearMotioneering.com for details.

| Ordering Length (L) and Maximum Stroke (Smax) |
|---|
| L = Smax + 7.0 |

# 2DB120

## Ball Screw Drive, Ball Guide – Inch Interface

» Ordering key - see page 182
» Accessories - see page 117

## General Specifications

| Parameter | 2DB120 |
|---|---|
| Profile size (w × h) [inch] | 6 × 2.125 |
| Type of screw | ball screw |
| Carriage sealing system | none (optional bellows) |
| Screw supports | none |
| Lubrication | lubrication of screws and guides |
| Included accessories | RediMount™ kit |

## Performance Specifications

| Parameter | | 2DB120 |
|---|---|---|
| Stroke length (Smax), maximum | [inch] | 63 |
| Linear speed, maximum | [inch/sec] | 10.0 |
| Acceleration, maximum | [inch/s²] | 385 |
| Repeatability<br>standard nut<br>preloaded nut | [± inch] | <br>0.0020<br>0.0002 |
| Accuracy | [± inch] | 0.002 / 12 in |
| Input speed, maximum | [rpm] | 3000 |
| Operation temperature limits | [°F] | -4 – 176 |
| Dynamic load (Fx), maximum | [lbs] | 190 |
| Dynamic load (Fy), maximum | [lbs] | 1058 |
| Dynamic load (Fz), maximum | [lbs] | 2115 |
| Dynamic load torque (Mx), maximum | [lbf-in] | 4150 |
| Dynamic load torque (My), maximum | [lbf-in] | 4150 |
| Dynamic load torque (Mz), maximum | [lbf-in] | 2071 |
| Drive shaft force (Frd), maximum [1] | [lbf] | 120 |
| Input/drive shaft torque (Mta), maximum | [lbf-in] | 6.73 |
| Ball screw diameter ($d_0$) | [inch] | 0.5 |
| Ball screw lead (p) | [inch] | 0.631 |
| Weight<br>of unit with zero stroke<br>of every 100 mm of stroke<br>of each carriage | [lb] | <br>13.17<br>2.30<br>4.29 |

[1] With radial mount option only.

## Deflection of the Profile

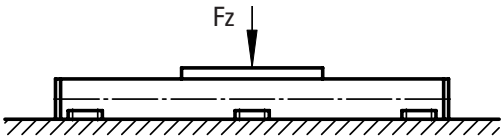


The unit must be continuously supported by a machined surface under its entire length.

## Definition of Forces

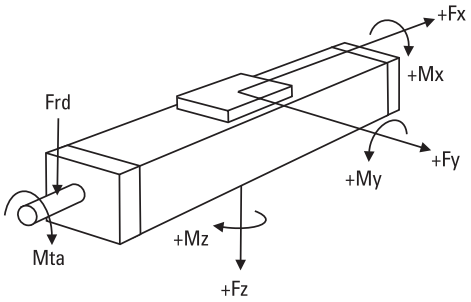

# 2DB120

| Dimensions | Projection | Online Sizing & Selection! |
|---|---|---|
| INCH | | www.LinearMotioneering.com |

## Ball Screw Drive, Ball Guide – Inch Interface

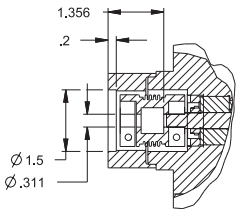


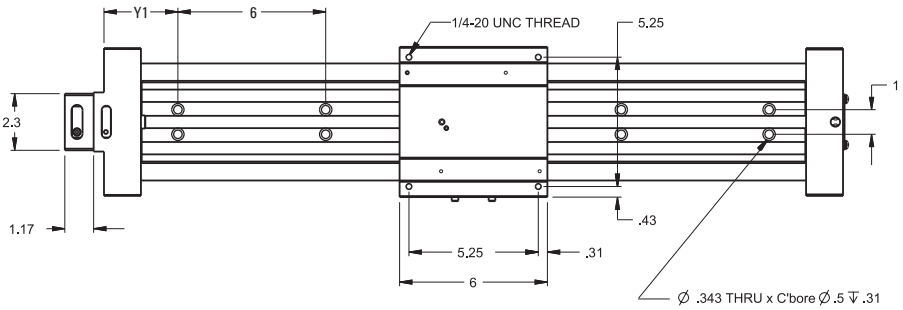


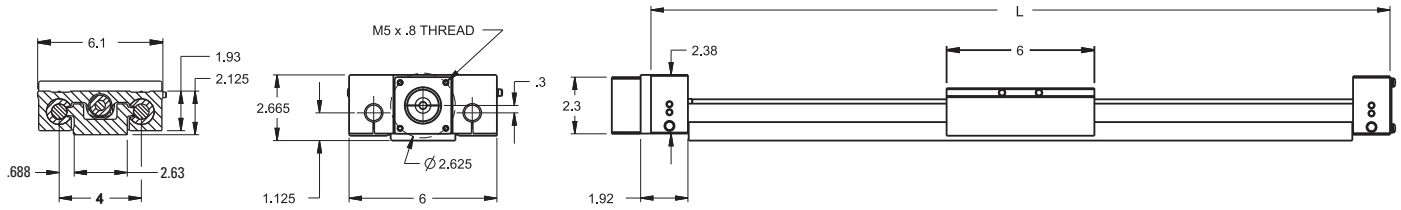


Standard NEMA23 motor dimensions are shown. Other mounting sizes are available and easily configured. Please see www.LinearMotioneering.com for details.

| Ordering Length (L) and Maximum Stroke (Smax) |
|---|
| L = Smax + 9.0 |

# 2DB12J

## Ball Screw Drive, Ball Guide – Inch Interface

» Ordering key - see page 182
» Accessories - see page 117

## General Specifications

| Parameter | 2DB12J |
|---|---|
| Profile size (w × h) [inch] | 6 × 2.562 |
| Type of screw | ball screw |
| Carriage sealing system | none (optional bellows) |
| Screw supports | none |
| Lubrication | lubrication of screws and guides |
| Included accessories | RediMount™ kit |

## Performance Specifications

| Parameter | | 2DB12J |
|---|---|---|
| Stroke length (Smax), maximum | [inch] | 63 |
| Linear speed, maximum | [inch/sec] | 25.0 |
| Acceleration, maximum | [inch/s²] | 385 |
| Repeatability | [± inch] | 0.0002 |
| Accuracy | [± inch] | 0.002 / 12 in |
| Input speed, maximum | [rpm] | 3000 |
| Operation temperature limits | [°F] | -4 – 176 |
| Dynamic load (Fx), maximum | [lbs] | 375 |
| Dynamic load (Fy), maximum | [lbs] | 1058 |
| Dynamic load (Fz), maximum | [lbs] | 2115 |
| Dynamic load torque (Mx), maximum | [lbf-in] | 4150 |
| Dynamic load torque (My), maximum | [lbf-in] | 4150 |
| Dynamic load torque (Mz), maximum | [lbf-in] | 2071 |
| Drive shaft force (Frd), maximum [1] | [lbf] | 120 |
| Input/drive shaft torque (Mta), maximum | [lbf-in] | 33.19 |
| Ball screw diameter ($d_0$) | [inch] | 0.50 |
| Ball screw lead (p) | [inch] | 0.5 |
| Weight | [lb] | |
| of unit with zero stroke | | 13.58 |
| of every 100 mm of stroke | | 2.296 |
| of each carriage | | 4.850 |

[1] With radial mount option only.

## Deflection of the Profile

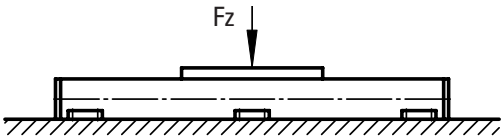


The unit must be continuously supported by a machined surface under its entire length.

## Definition of Forces

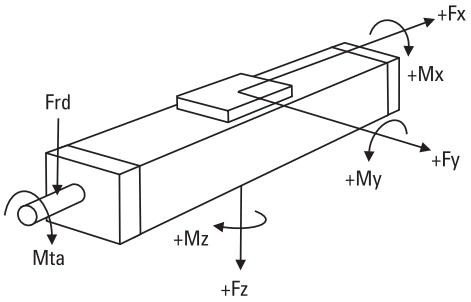

# 2DB12J

| Dimensions | Projection | Online Sizing & Selection! |
|---|---|---|
| INCH | | www.LinearMotioneering.com |

## Ball Screw Drive, Ball Guide – Inch Interface

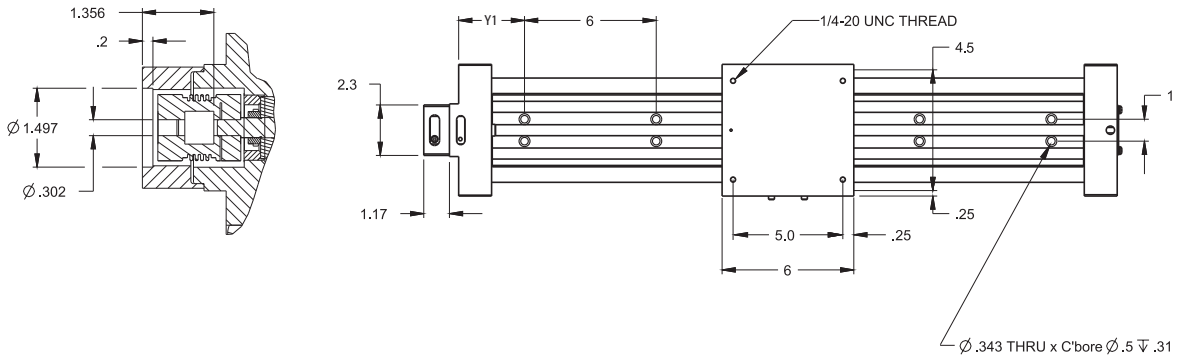


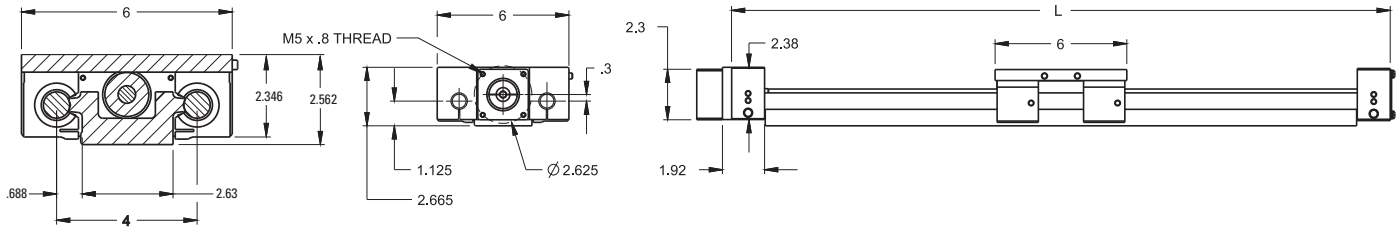


Standard NEMA23 motor dimensions are shown. Other mounting sizes are available and easily configured. Please see www.LinearMotioneering.com for details.

| Ordering Length (L) and Maximum Stroke (Smax) |
|---|
| L = Smax + 9.0 |

# 2DB160

## Ball Screw Drive, Ball Guide – Inch Interface

» Ordering key - see page 182
» Accessories - see page 117

## General Specifications

| Parameter | 2DB160 |
|---|---|
| Profile size (w × h) [inch] | 7.5 × 2.625 |
| Type of screw | ball screw |
| Carriage sealing system | none (optional bellows) |
| Screw supports | none |
| Lubrication | lubrication of screws and guides |
| Included accessories | RediMount™ kit |

## Performance Specifications

| Parameter | | 2DB160 |
|---|---|---|
| Stroke length (Smax), maximum | [inch] | 84.5 |
| Linear speed, maximum | [inch/sec] | 8.3 |
| Acceleration, maximum | [inch/s²] | 385 |
| Repeatability<br>standard nut<br>preloaded nut | [± inch] | <br>0.0020<br>0.0002 |
| Accuracy | [± inch] | 0.002 / 12 in |
| Input speed, maximum | [rpm] | 2500 |
| Operation temperature limits | [°F] | -4 – 176 |
| Dynamic load (Fx), maximum | [lbs] | 350 |
| Dynamic load (Fy), maximum | [lbs] | 1777 |
| Dynamic load (Fz), maximum | [lbs] | 3555 |
| Dynamic load torque (Mx), maximum | [lbf-in] | 8850 |
| Dynamic load torque (My), maximum | [lbf-in] | 8450 |
| Dynamic load torque (Mz), maximum | [lbf-in] | 4195 |
| Drive shaft force (Frd), maximum [1] | [lbf] | 120 |
| Input/drive shaft torque (Mta), maximum | [lbf-in] | 12.39 |
| Ball screw diameter ($d_0$)<br>inch diameters<br>metric diameters | <br>[inch]<br>[mm] | <br>0.75<br>20 |
| Ball screw lead (p)<br>inch leads<br>metric leads | <br>[inch]<br>[mm] | <br>0.2<br>5,0 |
| Weight<br>of unit with zero stroke<br>of every 100 mm of stroke<br>of each carriage | [lb] | <br>26.74<br>3.86<br>8.61 |

[1] With radial mount option only.

## Deflection of the Profile

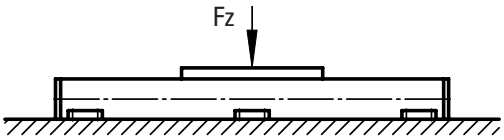


The unit must be continuously supported by a machined surface under its entire length.

## Definition of Forces

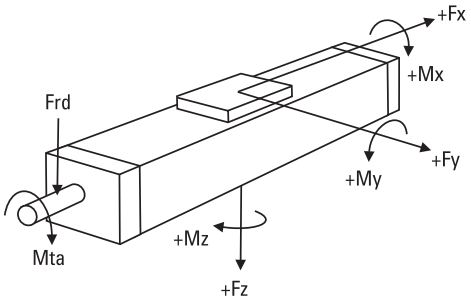

# 2DB160

| Dimensions | Projection | Online Sizing & Selection! |
|---|---|---|
| INCH | | www.LinearMotioneering.com |

## Ball Screw Drive, Ball Guide – Inch Interface

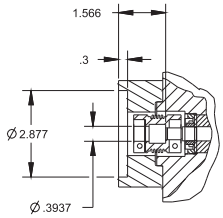


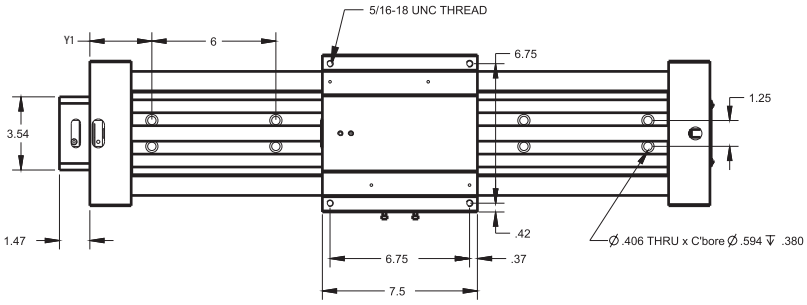


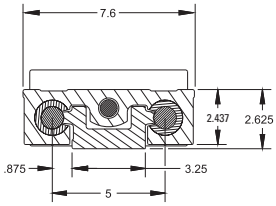


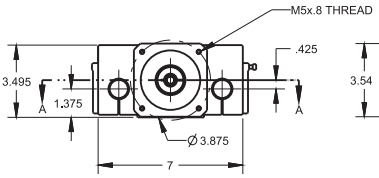


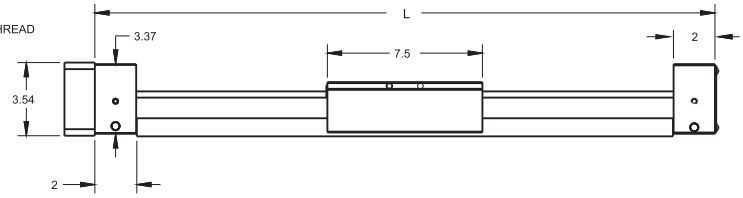


Standard NEMA23 motor dimensions are shown. Other mounting sizes are available and easily configured. Please see www.LinearMotioneering.com for details.

| Ordering Length (L) and Maximum Stroke (Smax) |
|---|
| L = Smax + 11.5 |

# 2DB16J

## Ball Screw Drive, Ball Guide – Inch Interface

» Ordering key - see page 182
» Accessories - see page 117

## General Specifications

| Parameter | 2DB16J |
|---|---|
| Profile size (w × h) [inch] | 7.5 × 3.062 |
| Type of screw | ball screw |
| Carriage sealing system | none (optional bellows) |
| Screw supports | none |
| Lubrication | lubrication of screws and guides |
| Included accessories | RediMount™ kit |

## Performance Specifications

| Parameter | | 2DB16J |
|---|---|---|
| Stroke length (Smax), maximum | [inch] | 84.5 |
| Linear speed, maximum | [inch/sec] | 41.67 |
| Acceleration, maximum | [inch/s²] | 385 |
| Repeatability | [± inch] | 0.0002 |
| Accuracy | [± inch] | 0.002 / 12 in |
| Input speed, maximum | [rpm] | 2500 |
| Operation temperature limits | [°F] | -4 – 176 |
| Dynamic load (Fx), maximum | [lbs] | 350 |
| Dynamic load (Fy), maximum | [lbs] | 1777 |
| Dynamic load (Fz), maximum | [lbs] | 3555 |
| Dynamic load torque (Mx), maximum | [lbf-in] | 8877 |
| Dynamic load torque (My), maximum | [lbf-in] | 8098 |
| Dynamic load torque (Mz), maximum | [lbf-in] | 4053 |
| Drive shaft force (Frd), maximum [1] | [lbf] | 120 |
| Input/drive shaft torque (Mta), maximum | [lbf-in] | 30.98 |
| Ball screw diameter ($d_0$) | [inch] | 0.631, 0.750 |
| Ball screw lead (p) | [inch] | 0.5, 1.0 |
| Weight | [lb] | |
| of unit with zero stroke | | 25.73 |
| of every 100 mm of stroke | | 3.86 |
| of each carriage | | 7.70 |

[1] With radial mount option only.

## Deflection of the Profile

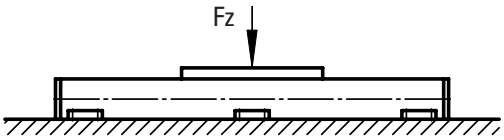


The unit must be continuously supported by a machined surface under its entire length.

## Definition of Forces

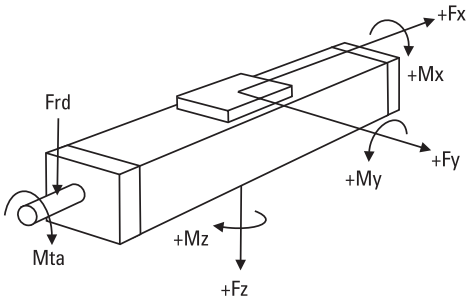

# 2DB16J

| Dimensions | Projection | Online Sizing & Selection! |
|---|---|---|
| INCH | | www.LinearMotioneering.com |

## Ball Screw Drive, Ball Guide – Inch Interface

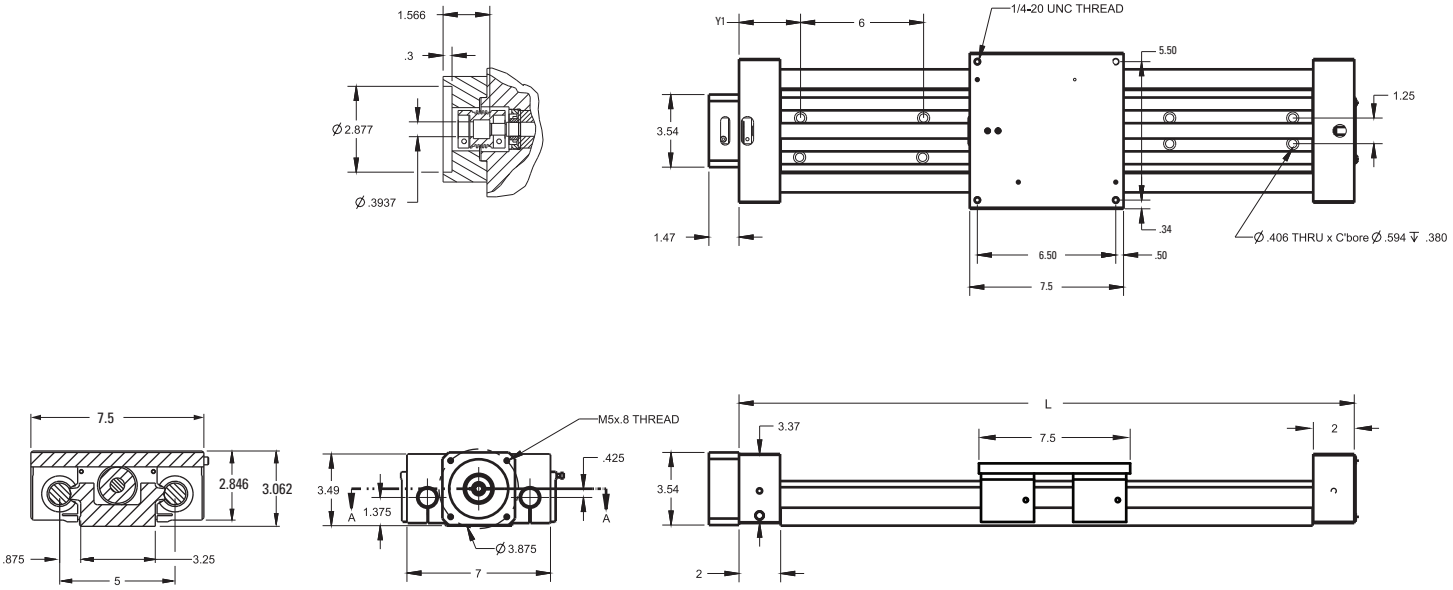


Standard NEMA23 motor dimensions are shown. Other mounting sizes are available and easily configured. Please see www.LinearMotioneering.com for details.

| Ordering Length (L) and Maximum Stroke (Smax) |
|---|
| L = Smax + 11.5 |

# Linear Motion Systems with Ball Screw Drive and Slide Guide

## Overview

### Movopart M

M75

**Features**

- Can be installed in any orientation
- Self-adjusting stainless steel cover band
- Patented internal self-adjusting prism slide guides
- Wash down protected versions available.

| Parameter | | M55 | M75 | M100 |
|---|---|---|---|---|
| Profile size (width × height) | [mm] | 58 × 55 | 86 × 75 | 108 × 100 |
| Stroke length (Smax), maximum | [mm] | 2712 | 3772 | 5578 |
| Linear speed, maximum | [m/s] | 1,0 | 1,6 | 1,6 |
| Dynamic carriage load (Fz), maximum | [N] | 400 | 1485 | 3005 |
| Remarks | | single ball nut | single ball nut | single ball nut |
| Page | | 66 | 68 | 70 |

# Linear Motion Systems with Ball Screw Drive and Slide Guide

## Overview

## M-Series Technical Presentation

**Cover band**
The self-adjusting magnetically sealed stainless steel cover band protects the unit from the penetration of dirt, dust and liquids.

**Environmental protection**
The standard unit can operate in harsh environments but is also available in a wash down version for environments that are dusty, dirty and/or wet.

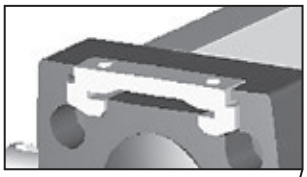

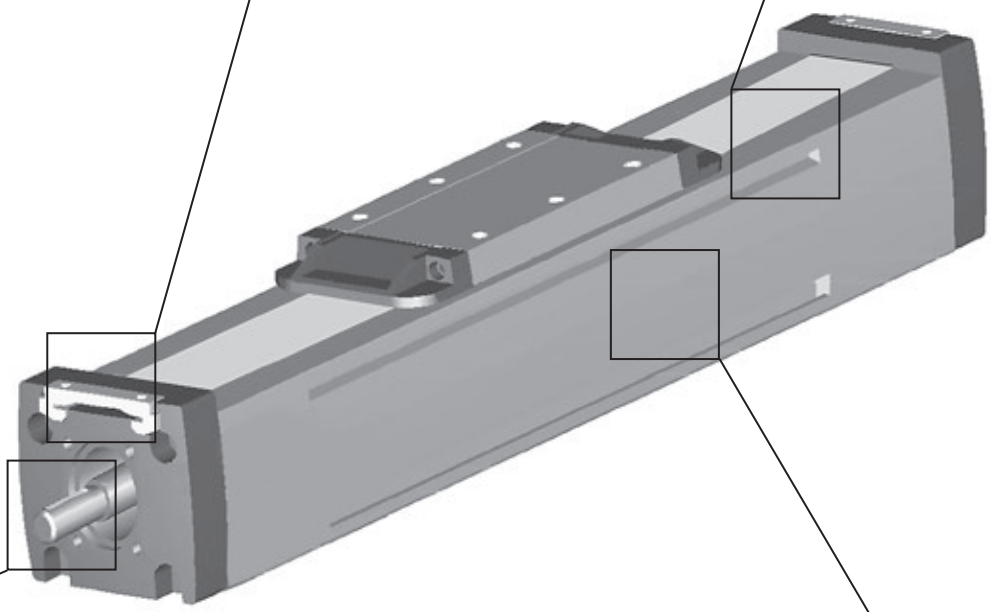

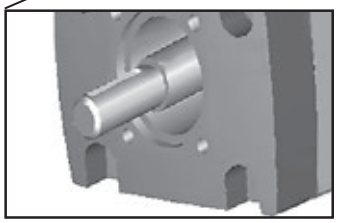

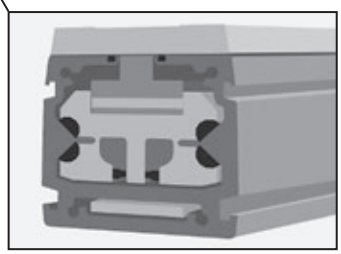

**Ball screw drive**
The ball screw ensures high accuracy and efficiency and the optional screw supports enable higher speeds.

**Prism slide guides**
The patented self-aligning prism slide guides are accurate, durable and are resistant to vibrations and shock loads.

**Note! the unit is pictured without a RediMount™ flange**

# M55

## Ball Screw Drive, Slide Guide

» Ordering key - see page 183
» Accessories - see page 117
» Additional data - see page 173

## General Specifications

| Parameter | M55 |
|---|---|
| Profile size (w × h) [mm] | 58 × 55 |
| Type of screw | ball screw with single nut |
| Carriage sealing system | self-adjusting steel cover band |
| Screw supports | number of screw supports to be specified by customer at order |
| Lubrication | lubrication of ball screw |
| Included accessories | none |

## Performance Specifications

for Units with Single Standard Carriage (A)[1]

| Parameter | | M55 |
|---|---|---|
| Stroke length (Smax), maximum | [mm] | 2712 |
| Total length (L tot), maximum | [mm] | 2975 |
| Linear speed, maximum | [m/s] | 1,0 |
| Acceleration, maximum | [m/s²] | 8 |
| Repeatability | [± mm] | 0,05 |
| Input speed, maximum | [rpm] | 3000 |
| Operation temperature limits | [°C] | -20 – 70 |
| Dynamic load (Fx), maximum | [N] | 1000 |
| Dynamic load (Fy), maximum | [N] | 400 |
| Dynamic load (Fz), maximum | [N] | 400 |
| Dynamic load torque (Mx), maximum | [Nm] | 9 |
| Dynamic load torque (My), maximum | [Nm] | 23 |
| Dynamic load torque (Mz), maximum | [Nm] | 23 |
| Drive shaft force (Frd), maximum [2] | [N] | 200 |
| Input/drive shaft torque (Mta), maximum | [Nm] | 12 |
| Screw diameter (d0) | [mm] | 16 |
| Screw lead (p) | [mm] | 5, 10, 20 |
| Weight | [kg] | |
| of unit with zero stroke | | 3,06 |
| of every 100 mm of stroke | | 0,44 |
| of carriage | | 1,20 |
| of option single screw support | | 0,83 |
| of option double screw supports | | 1,88 |

[1] See next page for deviating values of units with other carriage types.
[2] Only relevant for units without RediMount flange.

## Carriage Idle Torque (M idle) [Nm]

| Input speed [rpm] | Screw lead [mm] | | |
|---|---|---|---|
| | p = 5 | p = 10 | p = 20 |
| 500 - no screw supports | 0,10 | 0,15 | 0,30 |
| 500 - with screw supports | 0,13 | 0,27 | 0,45 |

M idle = the input torque needed to move the carriage with no load on it.

## Deflection of the Profile

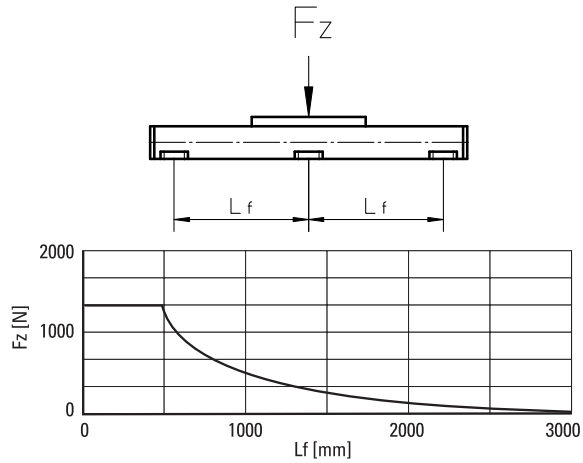


## Critical Speed

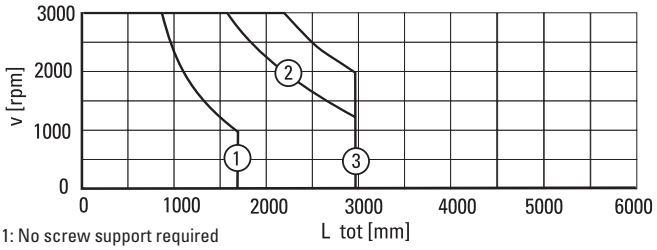


1: No screw support required
2: Single screw support required
3: Double screw supports required

## Definition of Forces

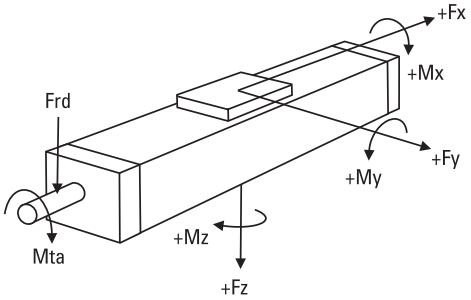

# M55

## Ball Screw Drive, Slide Guide

| Dimensions | Projection | Online Sizing & Selection! |
|---|---|---|
| METRIC | | www.LinearMotioneering.com |

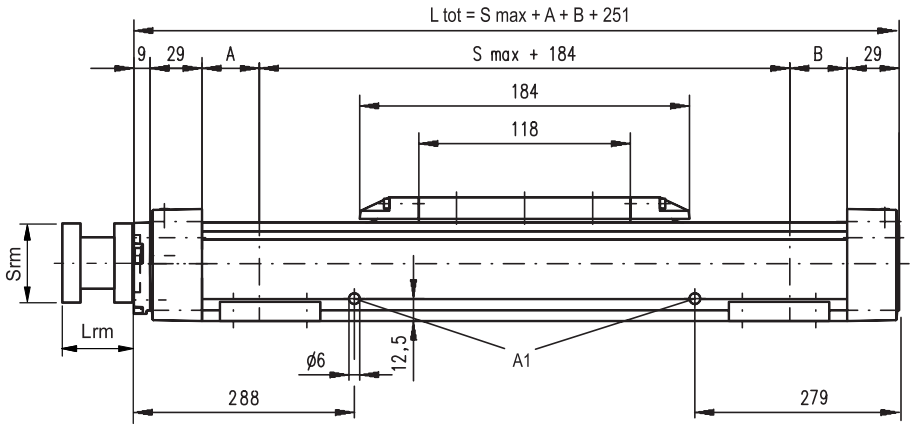


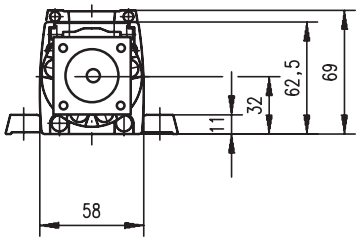


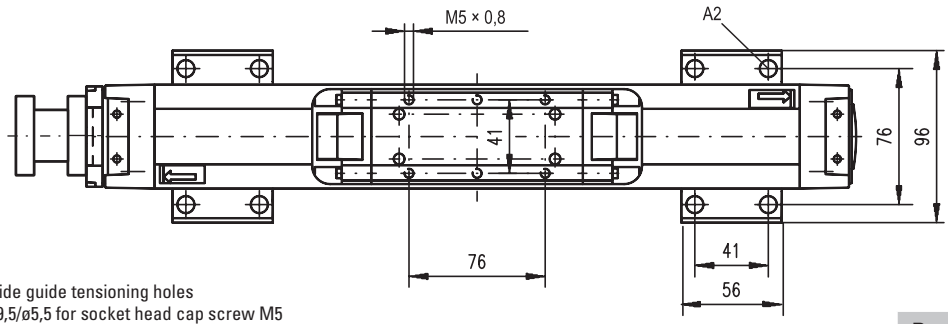


A1: slide guide tensioning holes
A2: ø9,5/ø5,5 for socket head cap screw M5

| Screw support configuration | A [mm] | B [mm] | Total length (L tot) [mm] |
|---|---|---|---|
| No screw support | 6 | 6 | L tot = Smax + A + B + 251 |
| Single screw support | 32 | 32 | L tot = Smax + A + B + 251 |
| Double screw supports | 83 | 83 | L tot = Smax + A + B + 251 |

### RediMount Flange Specifications

| Parameter | | Min | Max |
|---|---|---|---|
| Flange length (Lrm) | [mm] | 57 | 92 |
| Flange square (Srm) | [mm] | 60 | 139 |
| Flange weight * | [kg] | 1,84 | |

* Max. weight including coupling and fastening screws

## Performance Specifications

for Units with Double Standard Carriage (C)

| Parameter | | M55 |
|---|---|---|
| Stroke length (Smax), maximum | [mm] | 2512 |
| Total length (L tot), maximum | [mm] | 2975 |
| Minimum distance between carriages (Lc) | [mm] | 200 |
| Dynamic load (Fy), maximum | [N] | 600 |
| Dynamic load (Fz), maximum | [N] | 600 |
| Dynamic load torque (My), maximum | [Nm] | Lc[1] × 0,3 |
| Dynamic load torque (Mz), maximum | [Nm] | Lc[1] × 0,3 |
| Force required to move second carriage | [N] | 35 |
| Weight | [kg] | |
| of unit with zero stroke | | 5,14 |
| of carriages | | 2,40 |

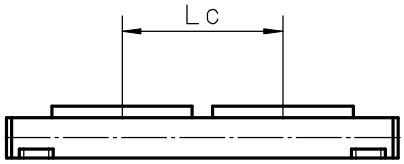


| Screw support configuration | A [mm] | B [mm] | Total length (L tot) [mm] |
|---|---|---|---|
| No screw support | 6 | 6 | L tot = Smax + A + B + Lc + 251 |
| Single screw support | 32 | 32 | L tot = Smax + A + B + Lc + 251 |
| Double screw supports | 83 | 83 | L tot = Smax + A + B + Lc + 251 |

[1] Value in mm

# M75

## Ball Screw Drive, Slide Guide

» Ordering key - see page 183
» Accessories - see page 117
» Additional data - see page 173

## General Specifications

| Parameter | M75 |
|---|---|
| Profile size (w × h) [mm] | 86 × 75 |
| Type of screw | ball screw with single nut |
| Carriage sealing system | self-adjusting steel cover band |
| Screw supports | number of screw supports to be specified by customer at order |
| Lubrication | lubrication of ball screw |
| Included accessories | none |

## Performance Specifications

for Units with Single Standard Carriage (A)[1]

| Parameter | | M75 |
|---|---|---|
| Stroke length (Smax), maximum | [mm] | |
| screw lead 5, 20 mm | | 3772 |
| screw lead 12,7 mm | | 2665 |
| Total length (L tot), maximum | [mm] | |
| screw lead 5, 20 mm | | 4075 |
| screw lead 12,7 mm | | 2968 |
| Linear speed, maximum | [m/s] | 1,6 |
| Acceleration, maximum | [m/s²] | 8 |
| Repeatability | [± mm] | 0,05 |
| Input speed, maximum | [rpm] | 5000 |
| Operation temperature limits | [°C] | -20 – 70 |
| Dynamic load (Fx), maximum | [N] | 2500 |
| Dynamic load (Fy), maximum | [N] | 1485 |
| Dynamic load (Fz), maximum | [N] | 1485 |
| Dynamic load torque (Mx), maximum | [Nm] | 49 |
| Dynamic load torque (My), maximum | [Nm] | 85 |
| Dynamic load torque (Mz), maximum | [Nm] | 85 |
| Drive shaft force (Frd), maximum [2] | [N] | 600 |
| Input/drive shaft torque (Mta), maximum | [Nm] | 30 |
| Screw diameter (d0) | [mm] | 20 |
| Screw lead (p) | [mm] | 5, 12,7, 20 |
| Weight | [kg] | |
| of unit with zero stroke | | 6,07 |
| of every 100 mm of stroke | | 0,82 |
| of carriage | | 1,70 |
| of option single screw support | | 1,70 |
| of option double screw supports | | 3,58 |

[1] See next page for deviating values of units with other carriage types.
[2] Only relevant for units without RediMount flange.

## Carriage Idle Torque (M idle) [Nm]

| Input speed [rpm] | Screw lead [mm] | | |
|---|---|---|---|
| | p = 5 | p = 12,7 | p = 20 |
| 500 - no screw supports | 0,10 | 0,24 | 0,37 |
| 500 - with screw supports | 0,15 | 0,39 | 0,57 |

M idle = the input torque needed to move the carriage with no load on it.

## Deflection of the Profile

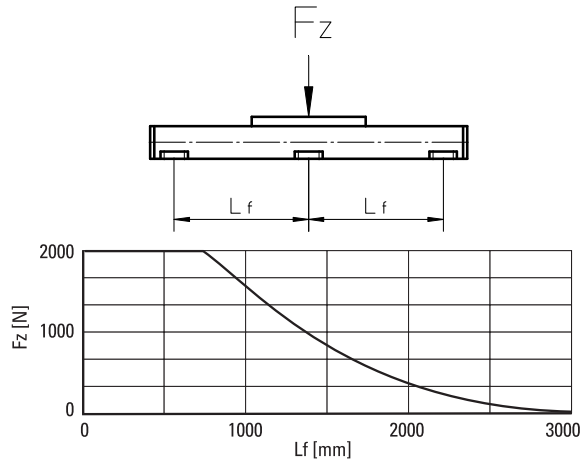


## Critical Speed

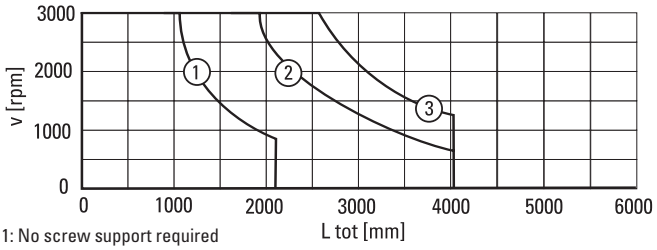


1: No screw support required
2: Single screw support required
3: Double screw supports required

## Definition of Forces

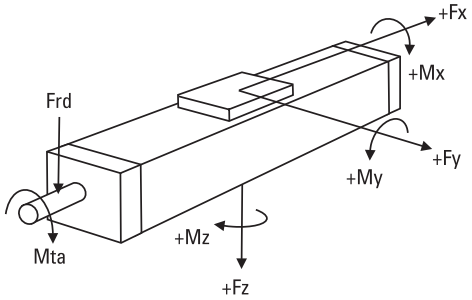

# M75

## Ball Screw Drive, Slide Guide

| Dimensions | Projection | Online Sizing & Selection! |
|---|---|---|
| METRIC | | www.LinearMotioneering.com |

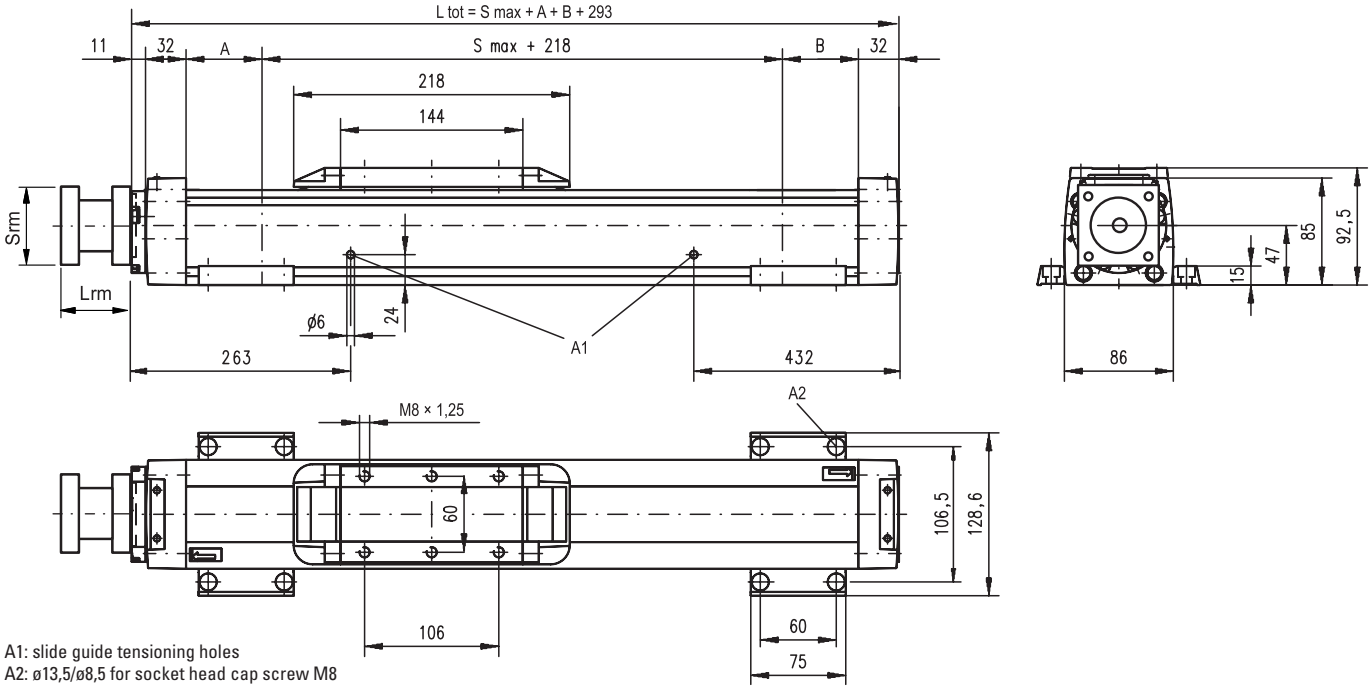


A1: slide guide tensioning holes
A2: ø13,5/ø8,5 for socket head cap screw M8

| Screw support configuration | A [mm] | B [mm] | Total length (L tot) [mm] |
|---|---|---|---|
| No screw support | 5 | 5 | L tot = Smax + A + B + 293 |
| Single screw support | 60 | 60 | L tot = Smax + A + B + 293 |
| Double screw supports | 126 | 126 | L tot = Smax + A + B + 293 |

### RediMount Flange Specifications

| Parameter | | Min | Max |
|---|---|---|---|
| Flange length (Lrm) | [mm] | 81 | 143 |
| Flange square (Srm) | [mm] | 90 | 200 |
| Flange weight * | [kg] | 5,60 | |

* Max. weight including coupling and fastening screws

## Performance Specifications

for Units with Double Standard Carriage (C)

| Parameter | | M75 |
|---|---|---|
| Stroke length (Smax), maximum | [mm] | |
| screw lead 5, 20 mm | | 3522 |
| screw lead 12,7 mm | | 2415 |
| Total length (L tot), maximum | [mm] | |
| screw lead 5, 20 mm | | 4075 |
| screw lead 12,7 mm | | 2968 |
| Minimum distance between carriages (Lc) | [mm] | 250 |
| Dynamic load (Fy), maximum | [N] | 2227 |
| Dynamic load (Fz), maximum | [N] | 2227 |
| Dynamic load torque (My), maximum | [Nm] | Lc[1] × 1,114 |
| Dynamic load torque (Mz), maximum | [Nm] | Lc[1] × 1,114 |
| Force required to move second carriage | [N] | 40 |
| Weight | [kg] | |
| of unit with zero stroke | | 9,82 |
| of carriages | | 3,40 |

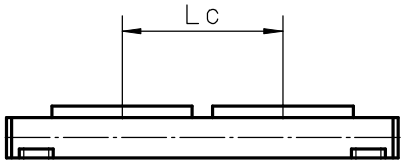


| Screw support configuration | A [mm] | B [mm] | Total length (L tot) [mm] |
|---|---|---|---|
| No screw support | 5 | 5 | L tot = Smax + A + B + Lc + 293 |
| Single screw support | 60 | 60 | L tot = Smax + A + B + Lc + 293 |
| Double screw supports | 126 | 126 | L tot = Smax + A + B + Lc + 293 |

[1] Value in mm

# M100

## Ball Screw Drive, Slide Guide

» Ordering key - see page 183
» Accessories - see page 117
» Additional data - see page 173

## General Specifications

| Parameter | M100 |
|---|---|
| Profile size (w × h) [mm] | 108 × 100 |
| Type of screw | ball screw with single nut |
| Carriage sealing system | self-adjusting steel cover band |
| Screw supports | number of screw supports to be specified by customer at order |
| Lubrication | lubrication of ball screw |
| Included accessories | none |

## Performance Specifications

for Units with Single Standard Carriage (A)[1]

| Parameter | | M100 |
|---|---|---|
| Stroke length (Smax), maximum | [mm] | |
| screw lead 5, 10 mm | | 5578 |
| screw lead 25 mm | | 4378 |
| Total length (L tot), maximum | [mm] | |
| screw lead 5, 10 mm | | 5974 |
| screw lead 25 mm | | 4774 |
| Linear speed, maximum | [m/s] | 1,6 |
| Acceleration, maximum | [m/s²] | 8 |
| Repeatability | [± mm] | 0,05 |
| Input speed, maximum | [rpm] | 4000 |
| Operation temperature limits | [°C] | -20 – 70 |
| Dynamic load (Fx), maximum | [N] | 5000 |
| Dynamic load (Fy), maximum | [N] | 3005 |
| Dynamic load (Fz), maximum | [N] | 3005 |
| Dynamic load torque (Mx), maximum | [Nm] | 117 |
| Dynamic load torque (My), maximum | [Nm] | 279 |
| Dynamic load torque (Mz), maximum | [Nm] | 279 |
| Drive shaft force (Frd), maximum [2] | [N] | 1000 |
| Input/drive shaft torque (Mta), maximum | [Nm] | 45 |
| Screw diameter (d0) | [mm] | 25 |
| Screw lead (p) | [mm] | 5, 10, 25 |
| Weight | [kg] | |
| of unit with zero stroke | | 12,87 |
| of every 100 mm of stroke | | 1,42 |
| of carriage | | 3,50 |
| of option single screw support | | 1,86 |
| of option double screw supports | | 4,42 |

[1] See next page for deviating values of units with other carriage types.
[2] Only relevant for units without RediMount flange.

## Carriage Idle Torque (M idle) [Nm]

| Input speed [rpm] | Screw lead [mm] | | |
|---|---|---|---|
| | p = 5 | p = 10 | p = 25 |
| 500 - no screw supports | 0,15 | 0,25 | 0,55 |
| 500 - with screw supports | 0,25 | 0,40 | 0,85 |

M idle = the input torque needed to move the carriage with no load on it.

## Deflection of the Profile

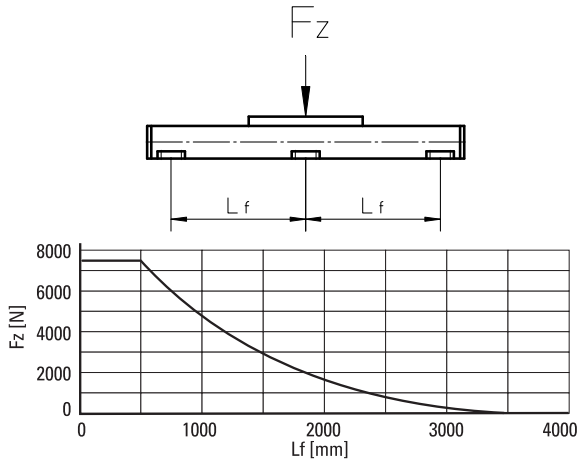


## Critical Speed

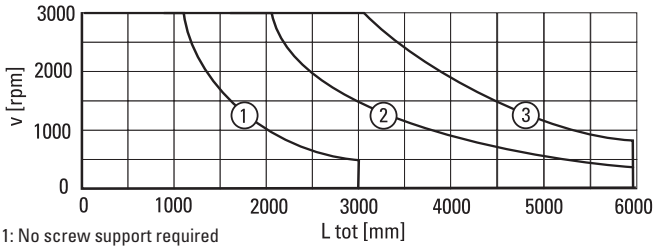


1: No screw support required
2: Single screw support required
3: Double screw supports required

## Definition of Forces

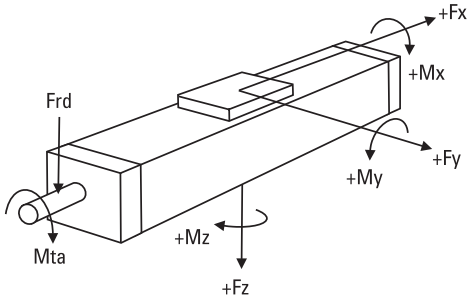

# M100

## Ball Screw Drive, Slide Guide

| Dimensions | Projection | Online Sizing & Selection! |
|---|---|---|
| METRIC | | www.LinearMotioneering.com |

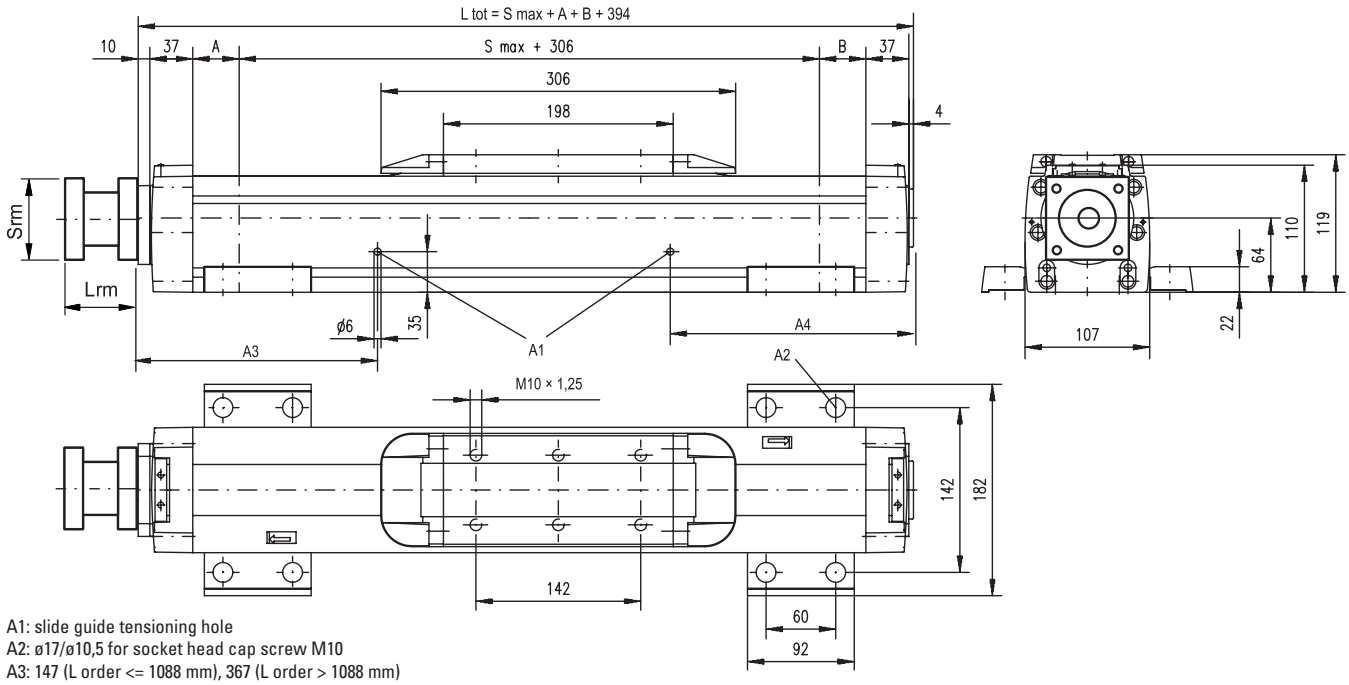


A1: slide guide tensioning hole
A2: ø17/ø10,5 for socket head cap screw M10
A3: 147 (L order <= 1088 mm), 367 (L order > 1088 mm)
A4: 141 (L order <= 1088 mm), 471 (L order > 1088 mm)

| Screw support configuration | A [mm] | B [mm] | Total length (L tot) [mm] |
|---|---|---|---|
| No screw support | 1 | 1 | L tot = Smax + A + B + 394 |
| Single screw support | 31 | 31 | L tot = Smax + A + B + 394 |
| Double screw supports | 86 | 86 | L tot = Smax + A + B + 394 |

### RediMount Flange Specifications

| Parameter | | Min | Max |
|---|---|---|---|
| Flange length (Lrm) | [mm] | 81 | 143 |
| Flange square (Srm) | [mm] | 90 | 200 |
| Flange weight * | [kg] | 5,60 | |

* Max. weight including coupling and fastening screws

## Performance Specifications

for Units with Double Standard Carriage (C)

| Parameter | | M100 |
|---|---|---|
| Stroke length (Smax), maximum<br>screw lead 5, 10 mm<br>screw lead 25 mm | [mm] | <br>5228<br>4028 |
| Total length (L tot), maximum<br>screw lead 5, 10 mm<br>screw lead 25 mm | [mm] | <br>5974<br>4774 |
| Minimum distance between carriages (Lc) | [mm] | 350 |
| Dynamic load (Fy), maximum | [N] | 4508 |
| Dynamic load (Fz), maximum | [N] | 4508 |
| Dynamic load torque (My), maximum | [Nm] | Lc[1] × 2,254 |
| Dynamic load torque (Mz), maximum | [Nm] | Lc[1] × 2,254 |
| Force required to move second carriage | [N] | 45 |
| Weight<br>of unit with zero stroke<br>of carriages | [kg] | <br>21,34<br>7,00 |

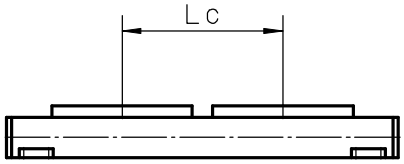


| Screw support configuration | A [mm] | B [mm] | Total length (L tot) [mm] |
|---|---|---|---|
| No screw support | 1 | 1 | L tot = Smax + A + B + Lc + 394 |
| Single screw support | 31 | 31 | L tot = Smax + A + B + Lc + 394 |
| Double screw supports | 86 | 86 | L tot = Smax + A + B + Lc + 394 |

[1] Value in mm

# Linear Motion Systems with Belt Drive and Ball Guide

## Overview

### SpeedLine WH

WH40

**Features**

- Can be installed in any orientation
- Stroke up to 2 m
- Acceleration up to 40 m/s²
- Compact

| Parameter | | WH40 |
|---|---|---|
| Profile size (width × height) | [mm] | 40 × 40 |
| Stroke length (Smax), maximum | [mm] | 2000 |
| Linear speed, maximum | [m/s] | 3,0 |
| Dynamic carriage load (Fz), maximum | [N] | 600 |
| Remarks | | no cover band |
| Page | | 74 |

### PowerLine WMZ

WM80Z

**Features**

- Can be installed in any orientation
- Stroke up to 5,5 m
- Speed up to 5 m/s
- Patented plastic cover band

| Parameter | | WM60Z | WM80Z |
|---|---|---|---|
| Profile size (width × height) | [mm] | 60 × 60 | 80 × 80 |
| Stroke length (Smax), maximum | [mm] | 4000 | 5500 |
| Linear speed, maximum | [m/s] | 2,5 | 5,0 |
| Dynamic carriage load (Fz), maximum | [N] | 1400 | 2100 |
| Remarks | | - | - |
| Page | | 76 | 78, 80 |

### Movopart M

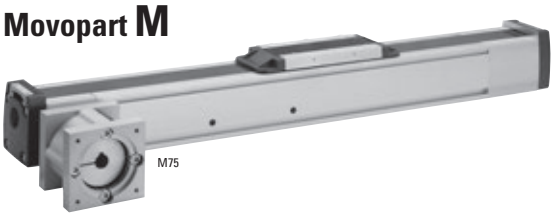

M75

**Features**

- Can be installed in any orientation
- Self-adjusting stainless steel cover band
- Stroke up to 12 m
- Wash down protected versions available.

| Parameter | | M55 | M75 | M100 |
|---|---|---|---|---|
| Profile size (width × height) | [mm] | 58 × 55 | 86 × 75 | 108 × 100 |
| Stroke length (Smax), maximum | [mm] | 7000 | 12000 | 11900 |
| Linear speed, maximum | [m/s] | 5,0 | 5,0 | 5,0 |
| Dynamic carriage load (Fz), maximum | [N] | 750 | 1750 | 4000 |
| Remarks | | - | - | - |
| Page | | 82 | 84 | 86 |

# Linear Motion Systems with Belt Drive and Ball Guide

## Overview

### ForceLine MLSM


**Features**

- Can be installed in any orientation
- Patented plastic cover band
- High load capabilities
- Low profile height

| Parameter | | MLSM80Z |
|---|---|---|
| Profile size (width × height) | [mm] | 240 × 85 |
| Stroke length (Smax), maximum | [mm] | 5900 |
| Linear speed, maximum | [m/s] | 5,0 |
| Dynamic carriage load (Fz), maximum | [N] | 6400 |
| Remarks | | - |
| Page | | 88 |

## WMZ-Series Technical Presentation

**Cover band**
The cover band protects the interior of the unit from the penetration of dirt, dust and liquids.

**Central lubrication**
One central lubrication point on the carriage services the entire unit resulting in a minimum maintenance requirement.

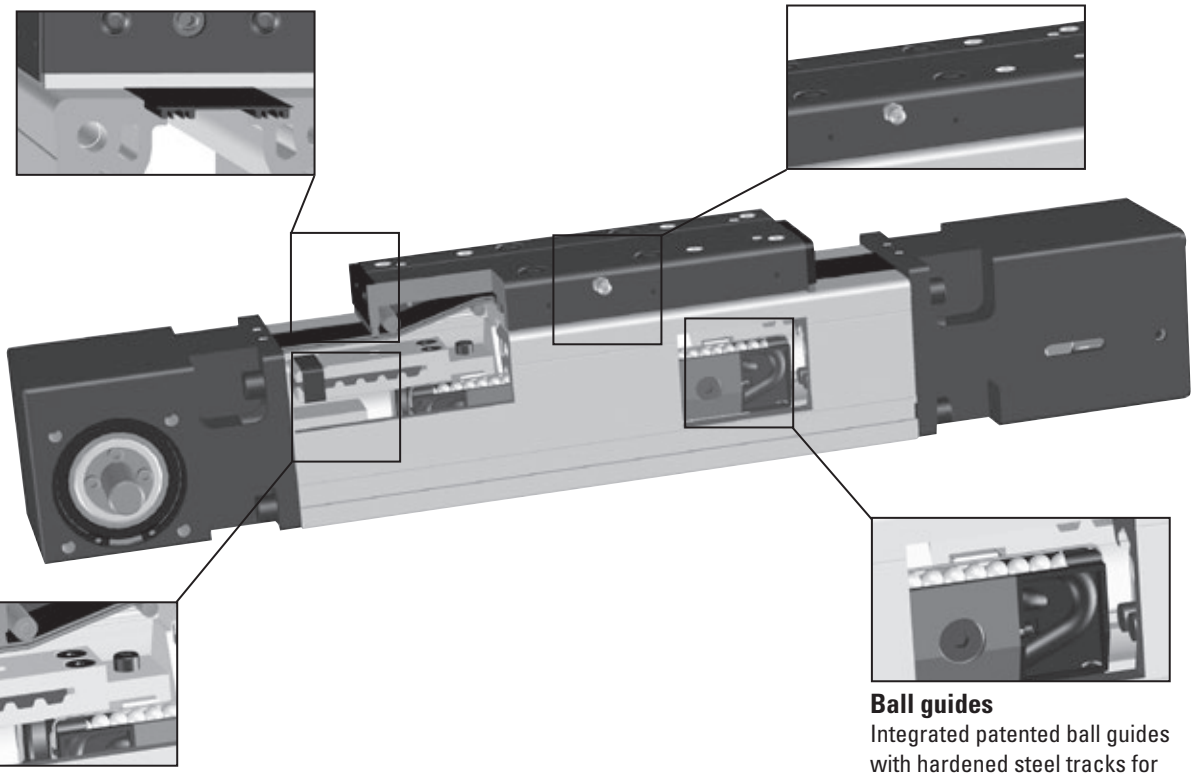

**Ball guides**
Integrated patented ball guides with hardened steel tracks for optimum performance.

**Belt drive**
The belt is protected from the outside ensuring long, accurate and safe operation.

**Note! the unit is pictured without a RediMount™ flange**

# WH40

## Belt Drive, Ball Guide

» Ordering key - see page 184
» Accessories - see page 117
» Additional data - see page 173

## General Specifications

| Parameter | WH40 |
|---|---|
| Profile size (w × h) [mm] | 40 × 40 |
| Type of belt | 10 AT 5 |
| Carriage sealing system | none |
| Adjustable belt tensioning | the belt can be retensioned by the customer if necessary |
| Lubrication | central lubrication of all parts that require lubrication |
| Included accessories | 4 × mounting clamps |

## Performance Specifications

for Units with Single Standard Carriage (N)[1]

| Parameter | | WH40 |
|---|---|---|
| Stroke length (Smax), maximum | [mm] | 2000 |
| Total length (L tot), maximum | [mm] | 2265 |
| Linear speed, maximum | [m/s] | 3,0 |
| Acceleration, maximum | [m/s²] | 40 |
| Repeatability | [± mm] | 0,05 |
| Input speed, maximum | [rpm] | 1800 |
| Operation temperature limits | [°C] | 0 – 80 |
| Dynamic load (Fx), maximum | [N] | 315 [2] |
| Dynamic load (Fy), maximum | [N] | 450 |
| Dynamic load (Fz), maximum | [N] | 600 |
| Dynamic load torque (Mx), maximum | [Nm] | 10 |
| Dynamic load torque (My), maximum | [Nm] | 30 |
| Dynamic load torque (Mz), maximum | [Nm] | 30 |
| Drive shaft force (Frd), maximum [3] | [N] | 100 |
| Input/drive shaft torque (Mta), maximum | [Nm] | 6 |
| Pulley diameter | [mm] | 31,83 |
| Stroke per shaft revolution | [mm] | 100 |
| Weight | [kg] | |
| of unit with zero stroke | | 1,19 |
| of every 100 mm of stroke | | 0,15 |
| of each carriage | | 0,28 |

[1] See next page for deviating values of units with other carriage types.
[2] See diagram Force Fx.
[3] Only relevant for units without RediMount flange.

## Carriage Idle Torque, (M idle) [Nm]

| Input speed [rpm] | Idle torque [Nm] |
|---|---|
| 150 | 0,1 |
| 900 | 0,3 |
| 1800 | 0,6 |

M idle = the input torque needed to move the carriage with no load on it.

## Deflection of the Profile

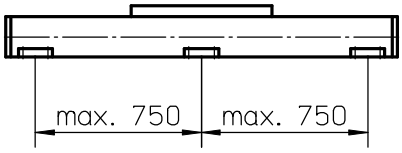


A mounting clamp must be installed at least every 750 mm to be able to operate at maximum load. Less clamps may be required if less load is being operated, see the additional technical data for more information.

## Force Fx as a Function of the Speed

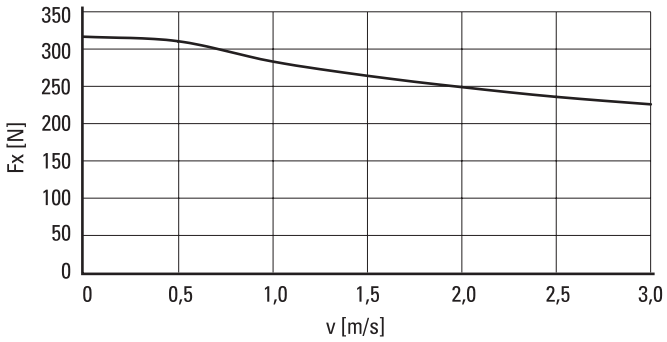


## Definition of Forces

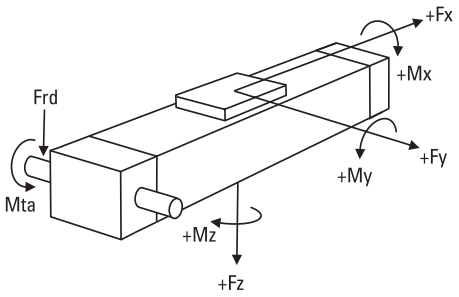

# WH40

## Belt Drive, Ball Guide

| Dimensions | Projection | Online Sizing & Selection! |
|---|---|---|
| METRIC | | www.LinearMotioneering.com |

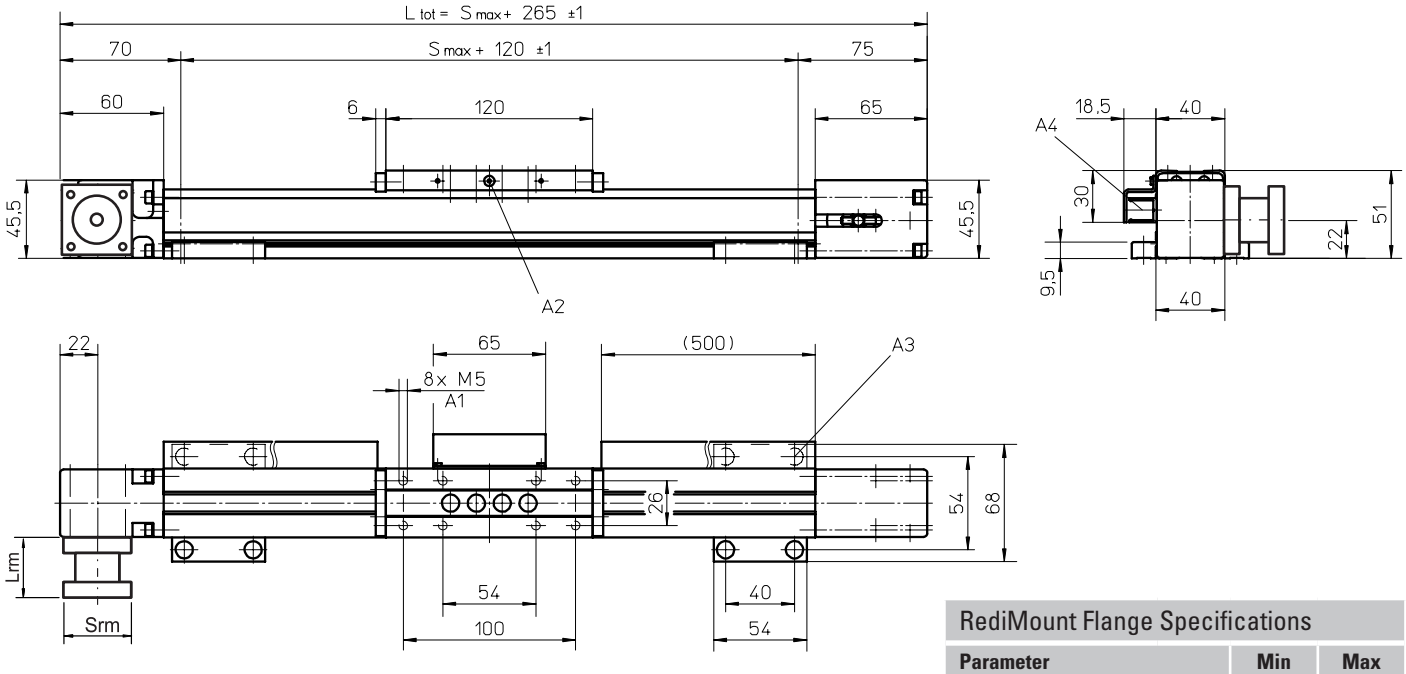


A1: depth 10
A2: lubricating nipple on both sides
A3: socket cap screw ISO4762-M5×12 8.8
A4: ENF inductive sensor rail kit (optional - see page 150)

### RediMount Flange Specifications

| Parameter | | Min | Max |
|---|---|---|---|
| Flange length (Lrm) | [mm] | 56 | 91 |
| Flange square (Srm) | [mm] | 60 | 139 |
| Flange weight * | [kg] | 1,81 | |

* Max. weight including coupling and fastening screws

## Performance Specifications
for Units with Single Long Carriage (L)

| Parameter | | WH40 |
|---|---|---|
| Stroke length (Smax), maximum | [mm] | 2000 |
| Total length (L tot), maximum | [mm] | 2355 |
| Carriage length | [mm] | 210 |
| Dynamic load torque (My), maximum | [Nm] | 50 |
| Dynamic load torque (Mz), maximum | [Nm] | 50 |
| Weight | [kg] | 0,43 |

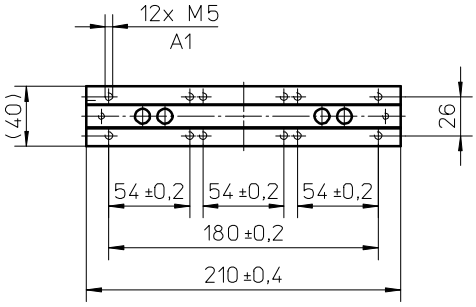


A1: depth 10

## Performance Specifications
for Units with Double Standard Carriage (Z)

| Parameter | | WH40 |
|---|---|---|
| Stroke length (Smax), maximum | [mm] | 1955 |
| Total length (L tot), maximum | [mm] | 2355 |
| Minimum distance between carriages (Lc) | [mm] | 135 |
| Dynamic load (Fy), maximum | [N] | 900 |
| Dynamic load (Fz), maximum | [N] | 1200 |
| Dynamic load torque (My), maximum | [Nm] | Lc[1] × 0,45 |
| Dynamic load torque (Mz), maximum | [Nm] | Lc[1] × 0,60 |
| Force required to move second carriage | [N] | 2 |
| Total length (L tot) | [mm] | Smax + 265 + Lc |

[1] Value in mm

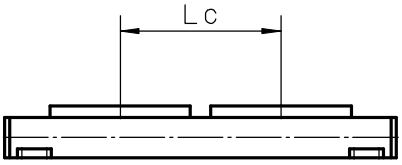

# WM60Z

## Belt Drive, Ball Guide, Short Carriage

» Ordering key - see page 185
» Accessories - see page 117
» Additional data - see page 173

## General Specifications

| Parameter | WM60Z |
|---|---|
| Profile size (w × h) [mm] | 60 × 60 |
| Type of belt | 20 ATL 5 |
| Carriage sealing system | plastic cover band |
| Adjustable belt tensioning | the belt can be retensioned by the customer if necessary |
| Lubrication | central lubrication of all parts that require lubrication |
| Included accessories | 4 × mounting clamps |

## Performance Specifications

for Units with Single Short Carriage (S)[1]

| Parameter | | WM60Z |
|---|---|---|
| Stroke length (Smax), maximum | [mm] | 4000 |
| Total length (L tot), maximum | [mm] | 4420 |
| Linear speed, maximum | [m/s] | 2,5 |
| Acceleration, maximum | [m/s²] | 20 |
| Repeatability | [± mm] | 0,05 |
| Input speed, maximum | [rpm] | 1250 |
| Operation temperature limits | [°C] | 0 – 80 |
| Dynamic load (Fx), maximum | [N] | 850 |
| Dynamic load (Fy), maximum | [N] | 1400 [2] |
| Dynamic load (Fz), maximum | [N] | 1400 |
| Dynamic load torque (Mx), maximum | [Nm] | 25 |
| Dynamic load torque (My), maximum | [Nm] | 50 |
| Dynamic load torque (Mz), maximum | [Nm] | 50 |
| Drive shaft force (Frd), maximum [3] | [N] | 150 |
| Input/drive shaft torque (Mta), maximum | [Nm] | 17 |
| Pulley diameter | [mm] | 38,20 |
| Stroke per shaft revolution | [mm] | 120 |
| Weight | [kg] | |
| of unit with zero stroke | | 4,30 |
| of every 100 mm of stroke | | 0,45 |
| of each carriage | | 1,25 |

[1] See next page for deviating values of units with other carriage types.
[2] See diagram Force Fx.
[3] Only relevant for units without RediMount flange.

## Carriage Idle Torque, (M idle) [Nm]

| Input speed [rpm] | Idle torque [Nm] |
|---|---|
| 150 | 1,6 |
| 600 | 2,5 |
| 1250 | 3,0 |

M idle = the input torque needed to move the carriage with no load on it.

## Deflection of the Profile

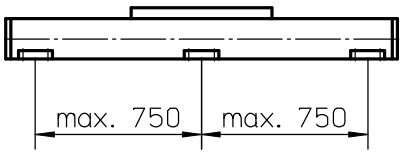


A mounting clamp must be installed at least every 750 mm to be able to operate at maximum load. Less clamps may be required if less load is being operated, see the additional technical data for more information.

## Force Fx as a Function of the Speed

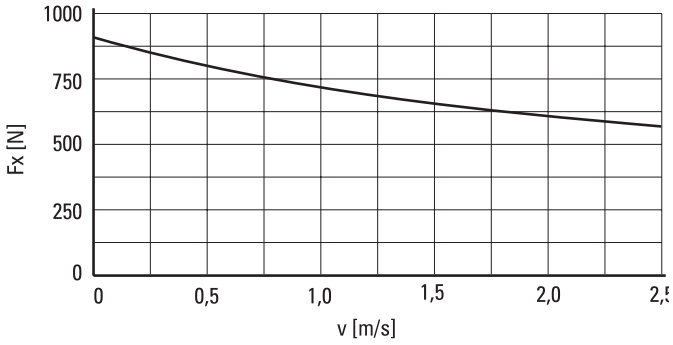


## Definition of Forces

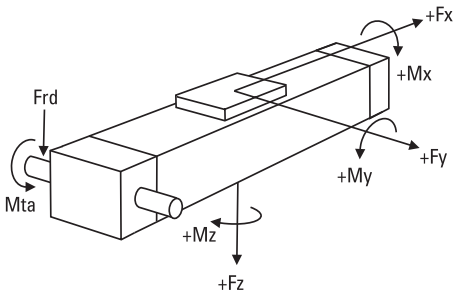

# WM60Z

## Belt Drive, Ball Guide, Short Carriage

| Dimensions | Projection | Online Sizing & Selection! |
|---|---|---|
| METRIC | | www.LinearMotioneering.com |

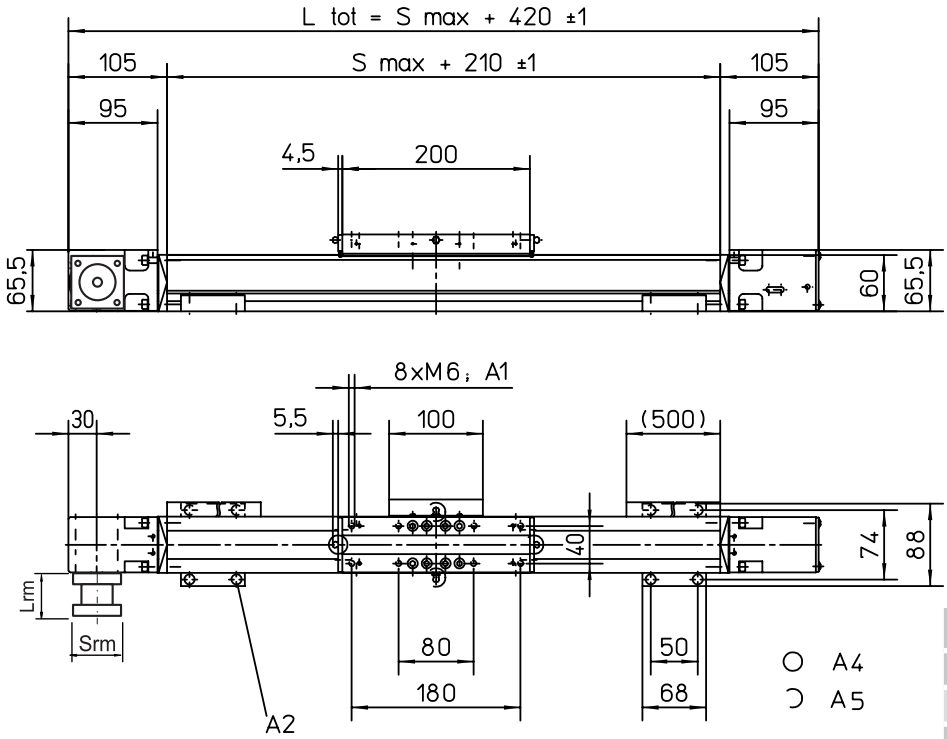


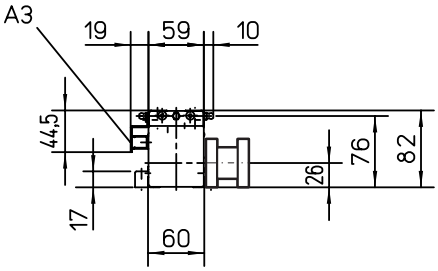


A1: depth 11
A2: socket cap screw ISO4762-M6×20 8.8
A3: ENF inductive sensor rail kit (optional - see page 150)
A4: tapered lubricating nipple to DIN71412 AM6 on fixed-bearing side as standard feature
A5: can be changed over to one of three alternative lubrications points by the customer

### RediMount Flange Specifications

| Parameter | | Min | Max |
|---|---|---|---|
| Flange length (Lrm) | [mm] | 83 | 145 |
| Flange square (Srm) | [mm] | 90 | 200 |
| Flange weight * | [kg] | 5,64 | |

* Max. weight including coupling and fastening screws

## Performance Specifications

for Units with Double Short Carriage (Y)

| Parameter | | WM60Z |
|---|---|---|
| Stroke length (Smax), maximum | [mm] | 3745 |
| Total length (L tot), maximum | [mm] | 4420 |
| Minimum distance between carriages (Lc) | [mm] | 255 |
| Dynamic load (Fy), maximum | [N] | 2800 |
| Dynamic load (Fz), maximum | [N] | 2800 |
| Dynamic load torque (My), maximum | [Nm] | L c[1] × 1,4 |
| Dynamic load torque (Mz), maximum | [Nm] | L c[1] × 1,4 |
| Force required to move second carriage | [N] | 18 |
| Total length (L tot) | [mm] | Smax + 420 + Lc |

[1] Value in mm

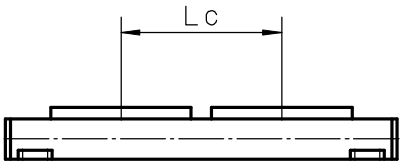

# WM80Z

## Belt Drive, Ball Guide, Standard Carriage

» Ordering key - see page 185
» Accessories - see page 117
» Additional data - see page 173

## General Specifications

| Parameter | WM80Z |
|---|---|
| Profile size (w × h) [mm] | 80 × 80 |
| Type of belt | 25 AT 10 |
| Carriage sealing system | plastic cover band |
| Adjustable belt tensioning | the belt can be retensioned by the customer if necessary |
| Lubrication | central lubrication of all parts that require lubrication |
| Included accessories | 4 × mounting clamps |

## Performance Specifications

for Units with Single Standard Carriage (N)[1]

| Parameter | | WM80Z |
|---|---|---|
| Stroke length (Smax), maximum | [mm] | 5400 |
| Total length (L tot), maximum | [mm] | 5990 |
| Linear speed, maximum | [m/s] | 2,5 |
| Acceleration, maximum | [m/s²] | 20 |
| Repeatability | [± mm] | 0,05 |
| Input speed, maximum | [rpm] | 885 |
| Operation temperature limits | [°C] | 0 – 80 |
| Dynamic load (Fx), maximum | [N] | 1470 |
| Dynamic load (Fy), maximum | [N] | 3000 [2] |
| Dynamic load (Fz), maximum | [N] | 3000 |
| Dynamic load torque (Mx), maximum | [Nm] | 150 |
| Dynamic load torque (My), maximum | [Nm] | 300 |
| Dynamic load torque (Mz), maximum | [Nm] | 300 |
| Drive shaft force (Frd), maximum [3] | [N] | 600 |
| Input/drive shaft torque (Mta), maximum | [Nm] | 40 |
| Pulley diameter | [mm] | 54,11 |
| Stroke per shaft revolution | [mm] | 170 |
| Weight | [kg] | |
| of unit with zero stroke | | 11,2 |
| of every 100 mm of stroke | | 0,8 |
| of each carriage | | 3,4 |

[1] See next page for deviating values of units with other carriage types.
[2] See diagram Force Fx.
[3] Only relevant for units without RediMount flange.

## Carriage Idle Torque, (M idle) [Nm]

| Input speed [rpm] | Idle torque [Nm] |
|---|---|
| 150 | 6,5 |
| 450 | 7,7 |
| 885 | 9,3 |

M idle = the input torque needed to move the carriage with no load on it.

## Deflection of the Profile

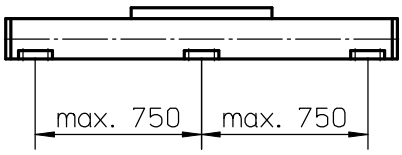


A mounting clamp must be installed at least every 750 mm to be able to operate at maximum load. Less clamps may be required if less load is being operated, see the additional technical data for more information.

## Force Fx as a Function of the Speed

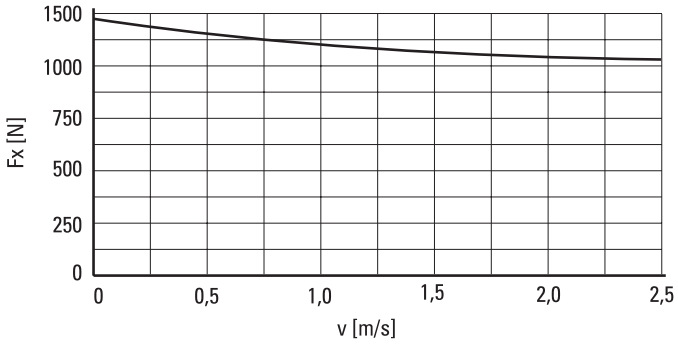


## Definition of Forces

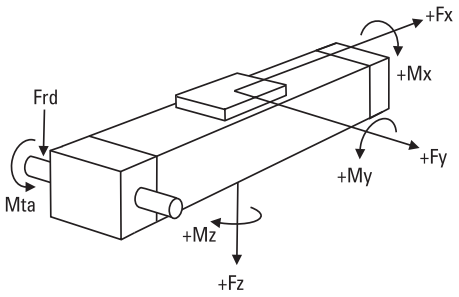

# WM80Z

## Belt Drive, Ball Guide, Standard Carriage

| Dimensions | Projection | Online Sizing & Selection! |
|---|---|---|
| METRIC | | www.LinearMotioneering.com |

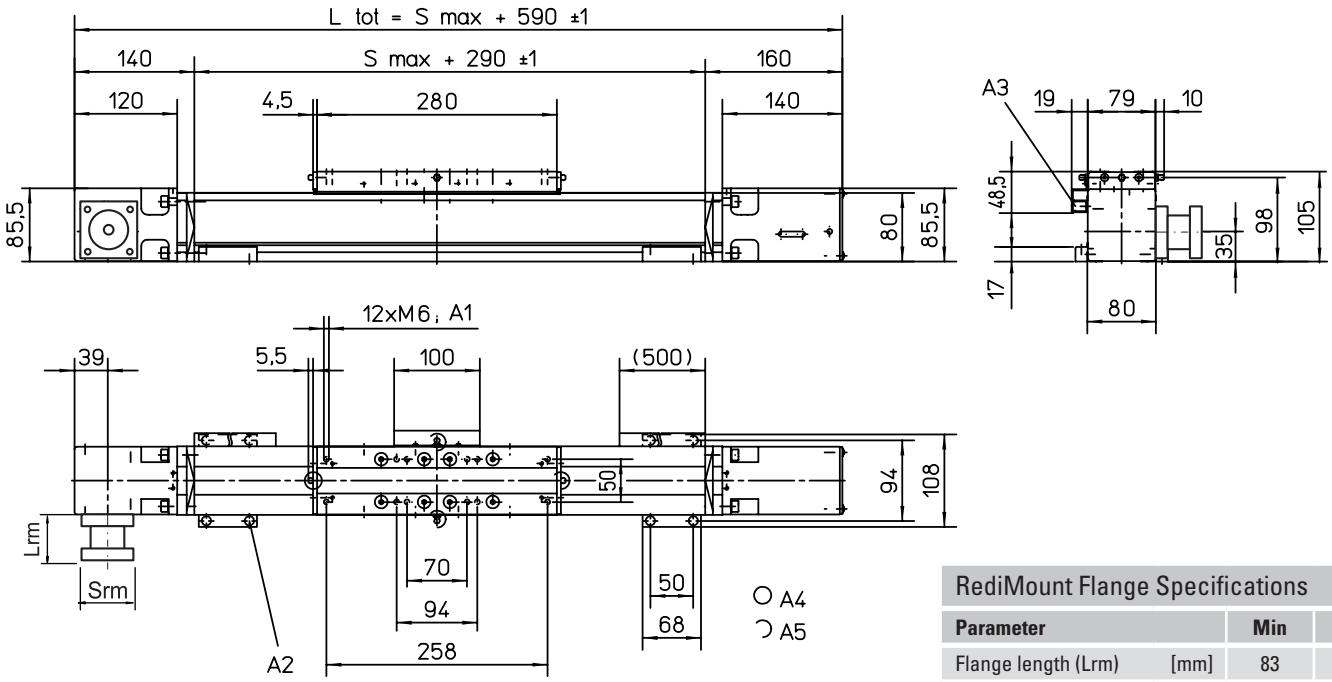


A1: depth 12
A2: socket cap screw ISO4762-M6×20 8.8
A3: ENF inductive sensor rail kit (optional - see page 150)
A4: tapered lubricating nipple to DIN71412 AM6 on fixed-bearing side as standard feature
A5: can be changed over to one of three alternative lubrications points by the customer

### RediMount Flange Specifications

| Parameter | | Min | Max |
|---|---|---|---|
| Flange length (Lrm) | [mm] | 83 | 145 |
| Flange square (Srm) | [mm] | 90 | 200 |
| Flange weight * | [kg] | 5,64 | |

* Max. weight including coupling and fastening screws

## Performance Specifications
for Units with Single Long Carriage (L)

| Parameter | | WM80Z |
|---|---|---|
| Stroke length (Smax), maximum | [mm] | 5400 |
| Total length (L tot), maximum | [mm] | 6160 |
| Carriage length | [mm] | 450 |
| Dynamic load torque (My), maximum | [Nm] | 750 |
| Dynamic load torque (Mz), maximum | [Nm] | 750 |
| Weight | [kg] | 5,1 |

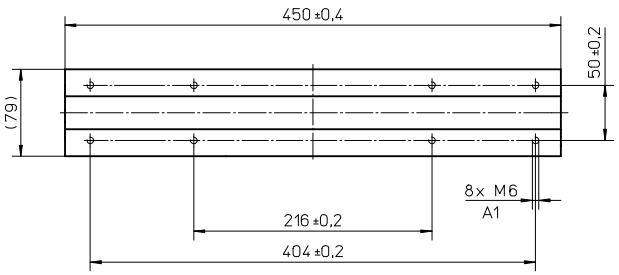


A1: depth 12 mm

## Performance Specifications
for Units with Double Standard Carriage (Z)

| Parameter | | WM80Z |
|---|---|---|
| Stroke length (Smax), maximum | [mm] | 5040 |
| Total length (L tot), maximum | [mm] | 5990 |
| Minimum distance between carriages (Lc) | [mm] | 360 |
| Dynamic load (Fy), maximum | [N] | 6000 |
| Dynamic load (Fz), maximum | [N] | 6000 |
| Dynamic load torque (My), maximum | [Nm] | L c[1] × 3 |
| Dynamic load torque (Mz), maximum | [Nm] | L c[1] × 3 |
| Force required to move second carriage | [N] | 25 |
| Total length (L tot) | [mm] | Smax + 590 + Lc |

[1] Value in mm

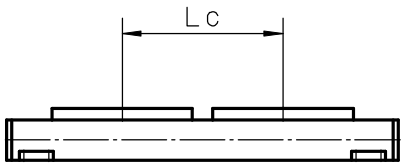

# WM80Z

## Belt Drive, Ball Guide, Short Carriage

» Ordering key - see page 185
» Accessories - see page 117
» Additional data - see page 173

## General Specifications

| Parameter | WM80Z |
|---|---|
| Profile size (w × h) [mm] | 80 × 80 |
| Type of belt | 25 AT 10 |
| Carriage sealing system | plastic cover band |
| Adjustable belt tensioning | the belt can be retensioned by the customer if necessary |
| Lubrication | central lubrication of all parts that require lubrication |
| Included accessories | 4 × mounting clamps |

## Performance Specifications

for Units with Single Short Carriage (S)[1]

| Parameter | | WM80Z |
|---|---|---|
| Stroke length (Smax), maximum | [mm] | 5500 |
| Total length (L tot), maximum | [mm] | 5990 |
| Linear speed, maximum | [m/s] | 2,5 |
| Acceleration, maximum | [m/s²] | 20 |
| Repeatability | [± mm] | 0,05 |
| Input speed, maximum | [rpm] | 885 |
| Operation temperature limits | [°C] | 0 – 80 |
| Dynamic load (Fx), maximum | [N] | 1470 |
| Dynamic load (Fy), maximum | [N] | 2100 [2] |
| Dynamic load (Fz), maximum | [N] | 2100 |
| Dynamic load torque (Mx), maximum | [Nm] | 68 |
| Dynamic load torque (My), maximum | [Nm] | 135 |
| Dynamic load torque (Mz), maximum | [Nm] | 135 |
| Drive shaft force (Frd), maximum [3] | [N] | 600 |
| Input/drive shaft torque (Mta), maximum | [Nm] | 40 |
| Pulley diameter | [mm] | 54,11 |
| Stroke per shaft revolution | [mm] | 170 |
| Weight | [kg] | |
| of unit with zero stroke | | 9,2 |
| of every 100 mm of stroke | | 0,8 |
| of each carriage | | 2,1 |

[1] See next page for deviating values of units with other carriage types.
[2] See diagram Force Fx.
[3] Only relevant for units without RediMount flange.

## Carriage Idle Torque, (M idle) [Nm]

| Input speed [rpm] | Idle torque [Nm] |
|---|---|
| 150 | 4,0 |
| 450 | 5,4 |
| 885 | 6,2 |

M idle = the input torque needed to move the carriage with no load on it.

## Deflection of the Profile

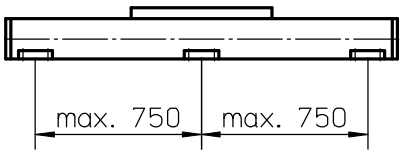


A mounting clamp must be installed at least every 750 mm to be able to operate at maximum load. Less clamps may be required if less load is being operated, see the additional technical data for more information.

## Force Fx as a Function of the Speed

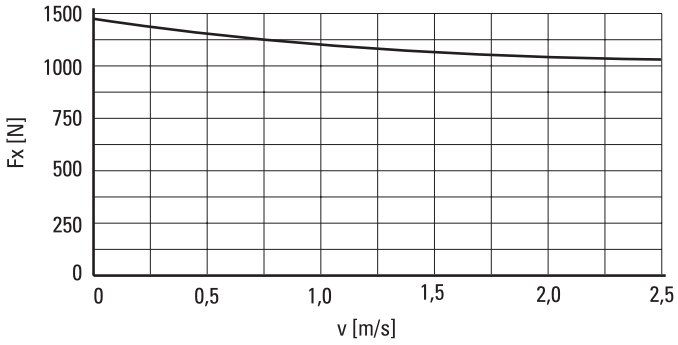


## Definition of Forces

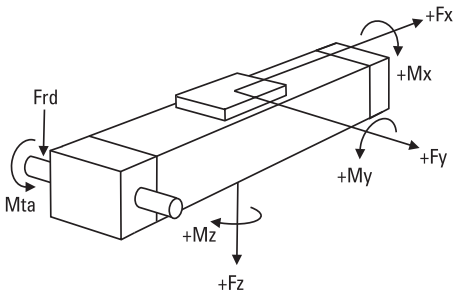

# WM80Z

## Belt Drive, Ball Guide, Short Carriage

| Dimensions | Projection | Online Sizing & Selection! |
|---|---|---|
| METRIC | | www.LinearMotioneering.com |

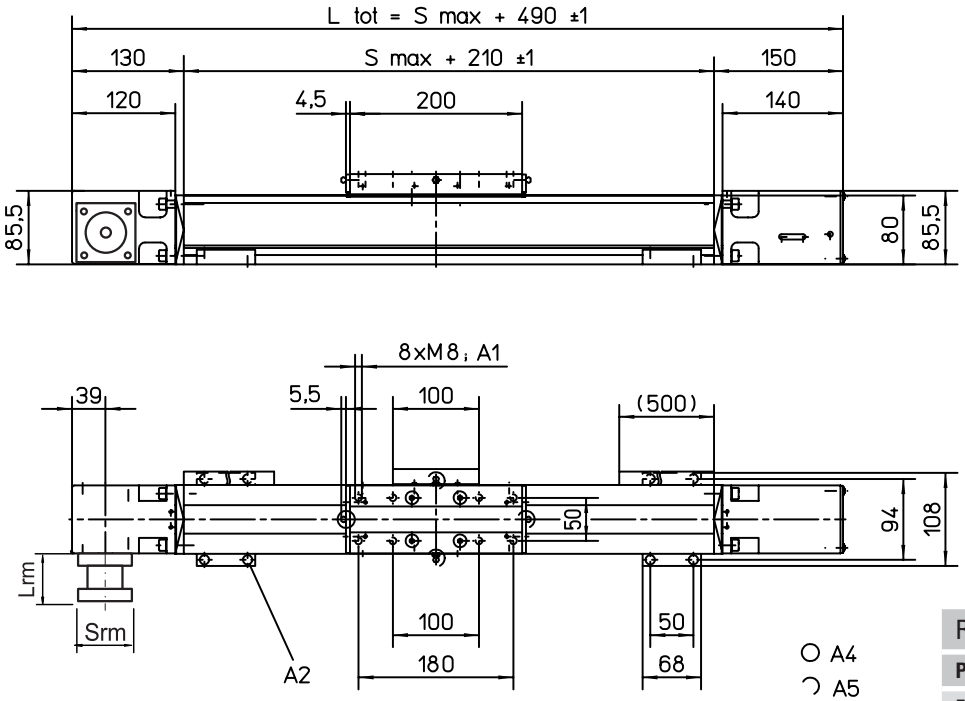


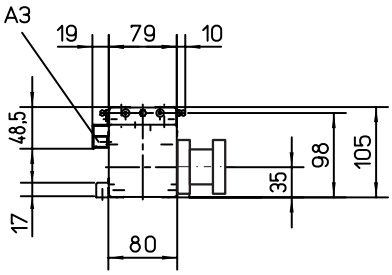


A1: depth 12
A2: socket cap screw ISO4762-M6×20 8.8
A3: ENF inductive sensor rail kit (optional - see page 150)
A4: tapered lubricating nipple to DIN71412 AM6 on fixed-bearing side as standard feature
A5: can be changed over to one of three alternative lubrications points by the customer

### RediMount Flange Specifications

| Parameter | | Min | Max |
|---|---|---|---|
| Flange length (Lrm) | [mm] | 83 | 145 |
| Flange square (Srm) | [mm] | 90 | 200 |
| Flange weight * | [kg] | 5,64 | |

* Max. weight including coupling and fastening screws

## Performance Specifications

for Units with Double Short Carriage (Y)[1]

| Parameter | | WM80Z |
|---|---|---|
| Stroke length (Smax), maximum | [mm] | 5220 |
| Total length (L tot), maximum | [mm] | 5990 |
| Minimum distance between carriages (Lc) | [mm] | 280 |
| Dynamic load (Fy), maximum | [N] | 4200 |
| Dynamic load (Fz), maximum | [N] | 4200 |
| Dynamic load torque (My), maximum | [Nm] | Lc[1] × 2,1 |
| Dynamic load torque (Mz), maximum | [Nm] | Lc[1] × 2,1 |
| Force required to move second carriage | [N] | 22,5 |
| Total length (L tot) | [mm] | Smax + 490 + Lc |

[1] Value in mm

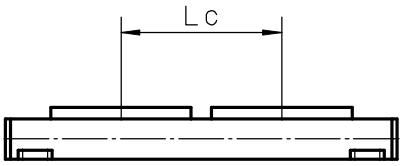

# M55

## Belt Drive, Ball Guide

» Ordering key - see page 186
» Accessories - see page 117
» Additional data - see page 173

## General Specifications

| Parameter | M55 |
|---|---|
| Profile size (w × h) [mm] | 58 × 55 |
| Type of belt | 22-STD SM5-HP |
| Carriage sealing system | self-adjusting steel cover band |
| Adjustable belt tensioning | the belt can be retensioned by the customer if necessary |
| Lubrication | lubrication of ball guide carriages |
| Included accessories | none |

## Performance Specifications

for Units with Single Standard Carriage (A)[1]

| Parameter | | M55 |
|---|---|---|
| Stroke length (Smax), maximum | [mm] | 7000 |
| Total length (L tot), maximum | [mm] | 7373 |
| Linear speed, maximum | [m/s] | 5,0 |
| Acceleration, maximum | [m/s²] | 40 |
| Repeatability | [± mm] | 0,1 |
| Input speed, maximum | [rpm] | 2850 |
| Operation temperature limits | [°C] | -20 – 70 |
| Dynamic load (Fx), maximum<br>< 2,5 m/s<br>> 2,5 m/s | [N] | <br>400<br>200 |
| Dynamic load (Fy), maximum | [N] | 750 |
| Dynamic load (Fz), maximum | [N] | 750 |
| Dynamic load torque (Mx), maximum | [Nm] | 5 |
| Dynamic load torque (My), maximum | [Nm] | 29 |
| Dynamic load torque (Mz), maximum | [Nm] | 29 |
| Drive shaft force (Frd), maximum [2] | [N] | 200 |
| Input/drive shaft torque (Mta), maximum | [Nm] | 12 |
| Pulley diameter | [mm] | 33,42 |
| Stroke per shaft revolution | [mm] | 105 |
| Weight<br>of unit with zero stroke<br>of every 100 mm of stroke<br>of carriage | [kg] | <br>4,80<br>0,53<br>1,20 |

[1] See next page for deviating values of units with other carriage types.
[2] Only relevant for units without RediMount flange.

## Carriage Idle Torque (M idle) [Nm]

| Input speed [rpm] | Single Carriage | Double Carriages |
|---|---|---|
| 150 | 1,0 | 1,9 |

M idle = the input torque needed to move the carriage with no load on it.

## Deflection of the Profile

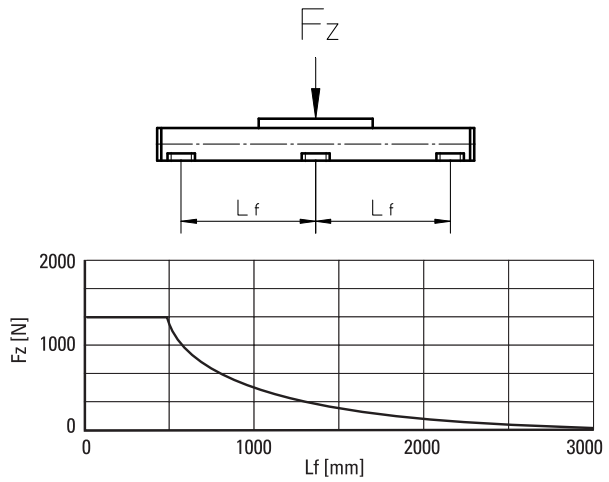


## Definition of Forces

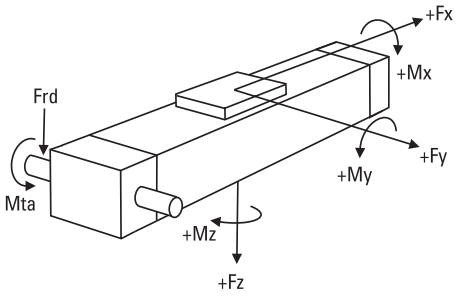

# M55

## Belt Drive, Ball Guide

| Dimensions | Projection | Online Sizing & Selection! |
|---|---|---|
| METRIC | | www.LinearMotioneering.com |

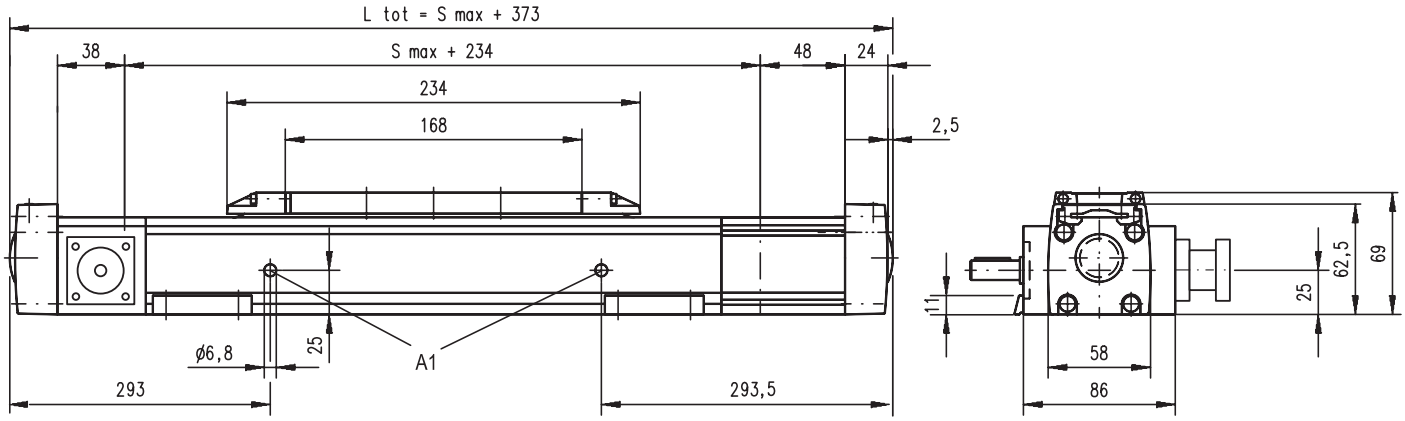


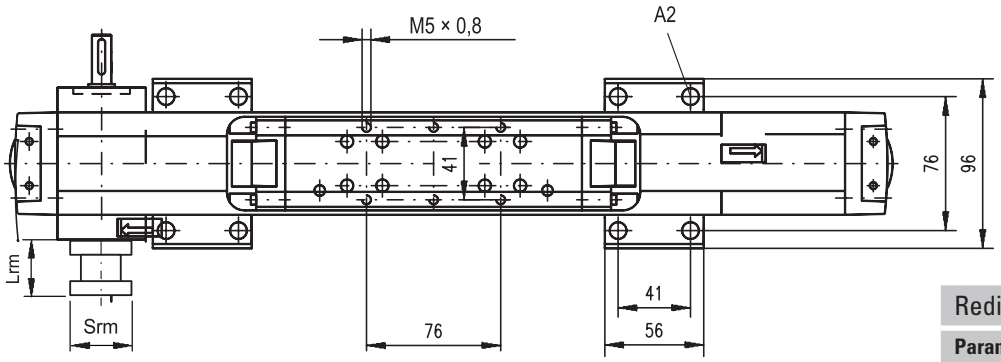


A1: lubrication holes
A2: ø9,5/ø5,5 for socket head cap screw M5

| RediMount Flange Specifications | | | |
|---|---|---|---|
| **Parameter** | | **Min** | **Max** |
| Flange length (Lrm) | [mm] | 57 | 92 |
| Flange square (Srm) | [mm] | 60 | 139 |
| Flange weight * | [kg] | 1,84 | |

* Max. weight including coupling and fastening screws

## Performance Specifications

for Units with Double Standard Carriage (C)

| Parameter | | M55 |
|---|---|---|
| Stroke length (Smax), maximum | [mm] | 6750 |
| Total length (L tot), maximum | [mm] | 7373 |
| Minimum distance between carriages (Lc) | [mm] | 250 |
| Dynamic load (Fy), maximum | [N] | 1125 |
| Dynamic load (Fz), maximum | [N] | 1125 |
| Dynamic load torque (My), maximum | [Nm] | Lc[1] × 0,56 |
| Dynamic load torque (Mz), maximum | [Nm] | Lc[1] × 0,56 |
| Force required to move second carriage | [N] | 2 |
| Total length (L tot] | [mm] | Smax + Lc + 373 |
| Weight<br>of unit with zero stroke<br>of carriages | [kg] | <br>7,06<br>2,40 |

[1] Value in mm

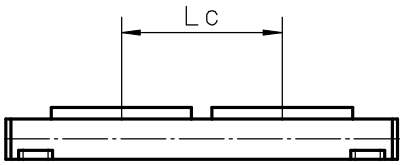

# M75

## Belt Drive, Ball Guide

» Ordering key - see page 186
» Accessories - see page 117
» Additional data - see page 173

## General Specifications

| Parameter | M75 / T75 |
|---|---|
| Profile size (w × h) [mm] | 86 × 75 |
| Type of belt | STD5-40 |
| Carriage sealing system | self-adjusting steel cover band |
| Adjustable belt tensioning | the belt can be retensioned by the customer if necessary |
| Lubrication | lubrication of ball guide carriages |
| Included accessories | none |

## Performance Specifications

for Units with Single Standard Carriage (A)[1]

| Parameter | | M75 |
|---|---|---|
| Stroke length (Smax), maximum | [mm] | 12000 |
| Total length (L tot), maximum | [mm] | 12368 |
| Linear speed, maximum | [m/s] | 5,0 |
| Acceleration, maximum | [m/s²] | 40 |
| Repeatability | [± mm] | 0,1 |
| Input speed, maximum | [rpm] | 2300 |
| Operation temperature limits | [°C] | -20 – 70 |
| Dynamic load (Fx), maximum<br>< 2,5 m/s<br>> 2,5 m/s | [N] | <br>900<br>450 |
| Dynamic load (Fy), maximum | [N] | 1750 |
| Dynamic load (Fz), maximum | [N] | 1750 |
| Dynamic load torque (Mx), maximum | [Nm] | 16 |
| Dynamic load torque (My), maximum | [Nm] | 84 |
| Dynamic load torque (Mz), maximum | [Nm] | 84 |
| Drive shaft force (Frd), maximum [2] | [N] | 600 |
| Input/drive shaft torque (Mta), maximum | [Nm] | 30 |
| Pulley diameter | [mm] | 41,38 |
| Stroke per shaft revolution | [mm] | 130 |
| Weight<br>of unit with zero stroke<br>of every 100 mm of stroke<br>of carriage | [kg] | <br>7,50<br>0,88<br>2,00 |

[1] See next page for deviating values of units with other carriage types.
[2] Only relevant for units without RediMount flange.

## Carriage Idle Torque (M idle) [Nm]

| Input speed [rpm] | Single Carriage | Double Carriages |
|---|---|---|
| 150 | 1,0 | 1,9 |

M idle = the input torque needed to move the carriage with no load on it.

## Deflection of the Profile

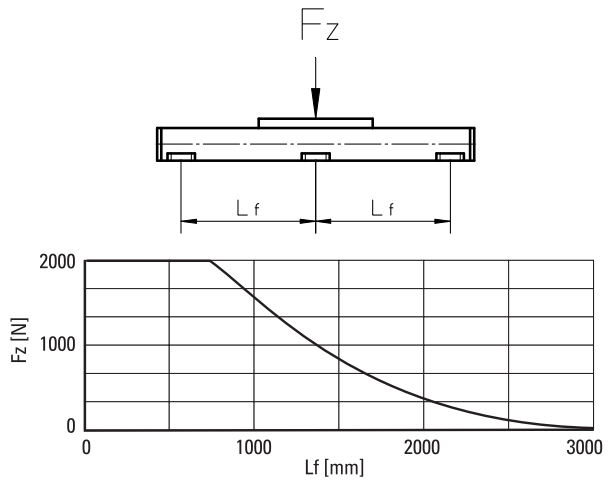


## Definition of Forces

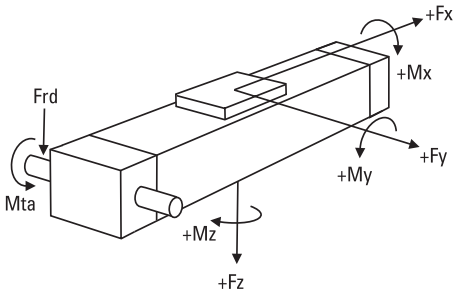

# M75

## Belt Drive, Ball Guide

| Dimensions | Projection | Online Sizing & Selection! |
|---|---|---|
| METRIC | | www.LinearMotioneering.com |

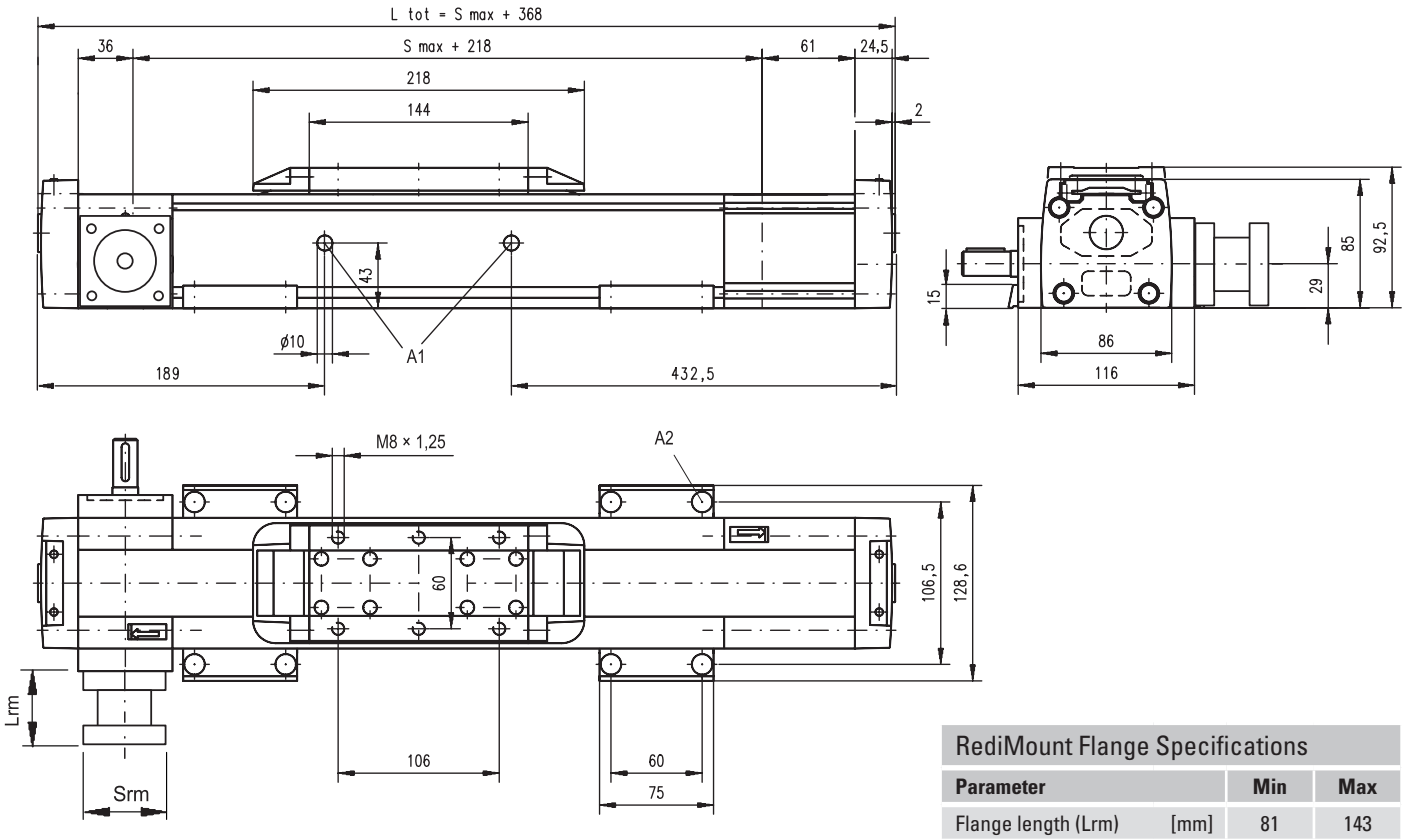


A1: lubrication holes
A2: ø13,5/ø8,5 for socket head cap screw M8

### RediMount Flange Specifications

| Parameter | | Min | Max |
|---|---|---|---|
| Flange length (Lrm) | [mm] | 81 | 143 |
| Flange square (Srm) | [mm] | 90 | 200 |
| Flange weight * | [kg] | 6,00 | |

* Max. weight including coupling and fastening screws

## Performance Specifications

for Units with Double Standard Carriage (C)

| Parameter | | M75 |
|---|---|---|
| Stroke length (Smax), maximum | [mm] | 11750 |
| Total length (L tot), maximum | [mm] | 12368 |
| Minimum distance between carriages (Lc) | [mm] | 250 |
| Dynamic load (Fy), maximum | [N] | 2625 |
| Dynamic load (Fz), maximum | [N] | 2625 |
| Dynamic load torque (My), maximum | [Nm] | Lc[1] × 1,313 |
| Dynamic load torque (Mz), maximum | [Nm] | Lc[1] × 1,313 |
| Force required to move second carriage | [N] | 2 |
| Total length (L tot] | [mm] | Smax + Lc + 368 |
| Weight<br>of unit with zero stroke<br>of carriages | [kg] | <br>11,67<br>4,00 |

[1] Value in mm

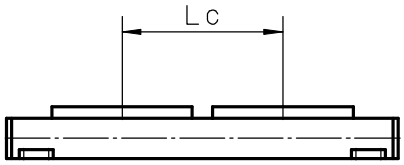

# M100

## Belt Drive, Ball Guide

» Ordering key - see page 186
» Accessories - see page 117
» Additional data - see page 173

## General Specifications

| Parameter | M100 |
|---|---|
| Profile size (w × h) [mm] | 108 × 100 |
| Type of belt | STD8-50 |
| Carriage sealing system | self-adjusting steel cover band |
| Adjustable belt tensioning | the belt can be retensioned by the customer if necessary |
| Lubrication | lubrication of ball guide carriages |
| Included accessories | none |

## Performance Specifications

for Units with Single Standard Carriage (A)[1]

| Parameter | | M100 |
|---|---|---|
| Stroke length (Smax), maximum | [mm] | 11900 |
| Total length (L tot), maximum | [mm] | 12361 |
| Linear speed, maximum | [m/s] | 5,0 |
| Acceleration, maximum | [m/s²] | 40 |
| Repeatability | [± mm] | 0,1 |
| Input speed, maximum | [rpm] | 1700 |
| Operation temperature limits | [°C] | -20 – 70 |
| Dynamic load (Fx), maximum<br>< 2,5 m/s<br>> 2,5 m/s | [N] | <br>1250<br>625 |
| Dynamic load (Fy), maximum | [N] | 4000 |
| Dynamic load (Fz), maximum | [N] | 4000 |
| Dynamic load torque (Mx), maximum | [Nm] | 43 |
| Dynamic load torque (My), maximum | [Nm] | 280 |
| Dynamic load torque (Mz), maximum | [Nm] | 280 |
| Drive shaft force (Frd), maximum [2] | [N] | 1000 |
| Input/drive shaft torque (Mta), maximum | [Nm] | 45 |
| Pulley diameter | [mm] | 56,02 |
| Stroke per shaft revolution | [mm] | 176 |
| Weight<br>of unit with zero stroke<br>of every 100 mm of stroke<br>of carriage | [kg] | <br>11,61<br>1,43<br>2,20 |

[1] See next page for deviating values of units with other carriage types.
[2] Only relevant for units without RediMount flange.

## Carriage Idle Torque (M idle) [Nm]

| Input speed [rpm] | Single Carriage | Double Carriages |
|---|---|---|
| 150 | 1,6 | 3,1 |

M idle = the input torque needed to move the carriage with no load on it.

## Deflection of the Profile

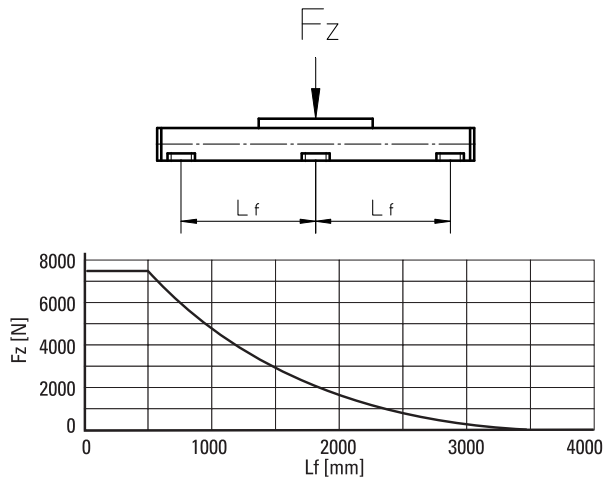


## Definition of Forces

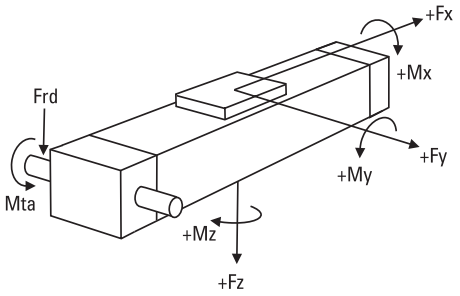

# M100

## Belt Drive, Ball Guide

| Dimensions | Projection | Online Sizing & Selection! |
|---|---|---|
| METRIC | | www.LinearMotioneering.com |

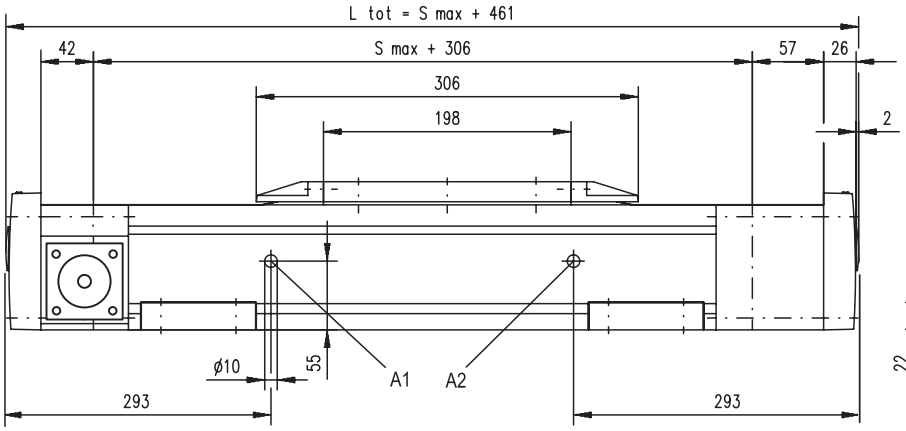


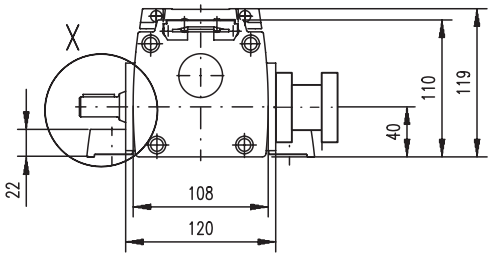


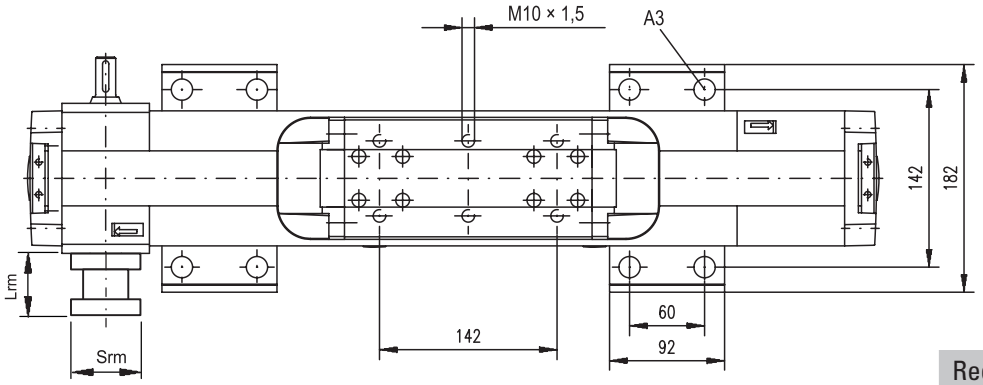


A1: lubrication hole
A2: lubrication hole (no hole if L order is < 856 mm)
A3: ø17/ø10,5 for socket head cap screw M10

### RediMount Flange Specifications

| Parameter | | Min | Max |
|---|---|---|---|
| Flange length (Lrm) | [mm] | 81 | 143 |
| Flange square (Srm) | [mm] | 90 | 200 |
| Flange weight * | [kg] | 6,00 | |

* Max. weight including coupling and fastening screws

## Performance Specifications

for Units with Double Standard Carriage (C)

| Parameter | | M100 |
|---|---|---|
| Stroke length (Smax), maximum | [mm] | 11550 |
| Total length (L tot), maximum | [mm] | 12361 |
| Minimum distance between carriages (Lc) | [mm] | 350 |
| Dynamic load (Fy), maximum | [N] | 6000 |
| Dynamic load (Fz), maximum | [N] | 6000 |
| Dynamic load torque (My), maximum | [Nm] | Lc[1] × 3 |
| Dynamic load torque (Mz), maximum | [Nm] | Lc[1] × 3 |
| Force required to move second carriage | [N] | 2 |
| Total length (L tot] | [mm] | Smax + Lc + 461 |
| Weight<br>of unit with zero stroke<br>of carriages | [kg] | <br>18,92<br>4,40 |

[1] Value in mm

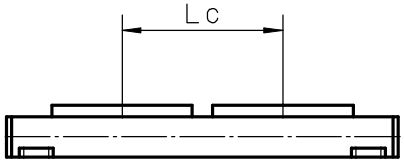

# MLSM80Z

## Belt Drive, Ball Guide

» Ordering key - see page 187
» Accessories - see page 117
» Additional data - see page 173

## General Specifications

| Parameter | MLSM80Z |
|---|---|
| Profile size (w × h) [mm] | 240 × 85 |
| Type of belt | 75 ATL 10 |
| Carriage sealing system | plastic cover band |
| Adjustable belt tensioning | the belt can be retensioned by the customer if necessary |
| Lubrication | central lubrication of all parts that require lubrication |
| Included accessories | 4 × mounting clamps |

## Performance Specifications

for Units with Single Standard Carriage (N)[1]

| Parameter | | MLSM80Z |
|---|---|---|
| Stroke length (Smax), maximum | [mm] | 5900 |
| Total length (L tot), maximum | [mm] | 6500 |
| Linear speed, maximum | [m/s] | 5,0 |
| Acceleration, maximum | [m/s²] | 20 |
| Repeatability | [± mm] | 0,05 |
| Input speed, maximum | [rpm] | 1500 |
| Operation temperature limits | [°C] | 0 – 80 |
| Dynamic load (Fx), maximum | [N] | 5000 [2] |
| Dynamic load (Fy), maximum | [N] | 6400 |
| Dynamic load (Fz), maximum | [N] | 6400 |
| Dynamic load torque (Mx), maximum | [Nm] | 600 |
| Dynamic load torque (My), maximum | [Nm] | 720 |
| Dynamic load torque (Mz), maximum | [Nm] | 720 |
| Drive shaft force (Frd), maximum [3] | [N] | 700 |
| Input/drive shaft torque (Mta), maximum | [Nm] | 150 |
| Pulley diameter | [mm] | 63,66 |
| Stroke per shaft revolution | [mm] | 200 |
| Weight | [kg] | |
| of unit with zero stroke | | 30,8 |
| of every 100 mm of stroke | | 2,2 |
| of each carriage | | 9,6 |

[1] See next page for deviating values of units with other carriage types.
[2] See diagram Force Fx.
[3] Only relevant for units without RediMount flange.

## Carriage Idle Torque, (M idle) [Nm]

| Input speed [rpm] | Idle torque [Nm] |
|---|---|
| 150 | 8,5 |
| 750 | 12 |
| 1500 | 14,5 |

M idle = the input torque needed to move the carriage with no load on it.

## Deflection of the Profile

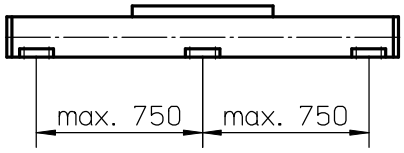


A mounting clamp must be installed at least every 750 mm to be able to operate at maximum load. Less clamps may be required if less load is being operated, see the additional technical data for more information.

## Force Fx as a Function of the Speed

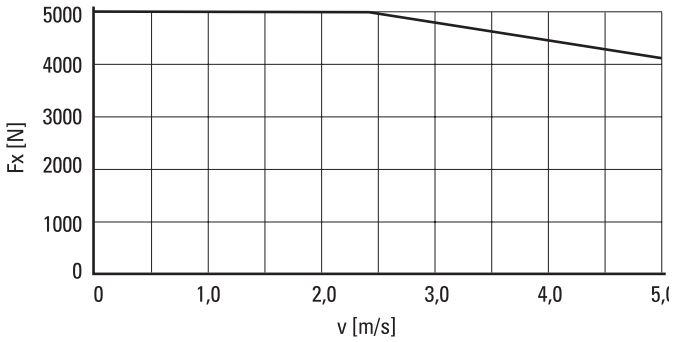


## Definition of Forces

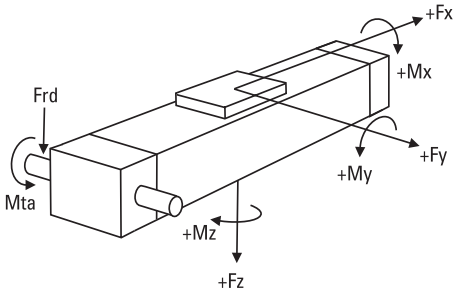

# MLSM80Z

## Belt Drive, Ball Guide

| Dimensions | Projection | Online Sizing & Selection! |
|---|---|---|
| METRIC | | www.LinearMotioneering.com |

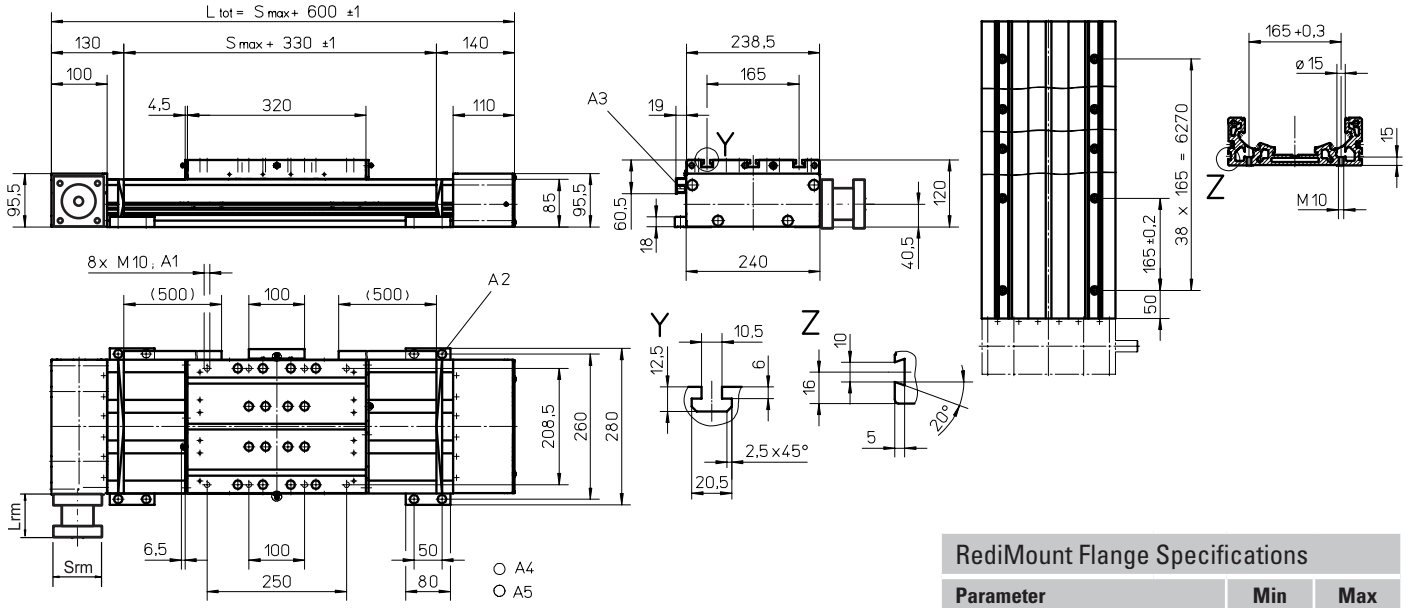


A1: depth 15
A2: socket cap screw ISO4762-M8×20 8.8
A3: ENF inductive sensor rail kit (optional - see page 150)
A4: tapered lubricating nipple to DIN71412 M8×1 on fixed-bearing side as standard feature
A5: can be changed over to one of the three alternative lubricating points by the customer

### RediMount Flange Specifications

| Parameter | | Min | Max |
|---|---|---|---|
| Flange length (Lrm) | [mm] | 81 | 143 |
| Flange square (Srm) | [mm] | 90 | 200 |
| Flange weight * | [kg] | 5,67 | |

* Max. weight including coupling and fastening screws

## Performance Specifications
for Units with Single Long Carriage (L)

| Parameter | | MLSM80Z |
|---|---|---|
| Stroke length (Smax), maximum | [mm] | 5900 |
| Total length (L tot), maximum | [mm] | 6680 |
| Carriage length | [mm] | 500 |
| Dynamic load torque (My), maximum | [Nm] | 1400 |
| Dynamic load torque (Mz), maximum | [Nm] | 1400 |
| Weight | [kg] | 14 |

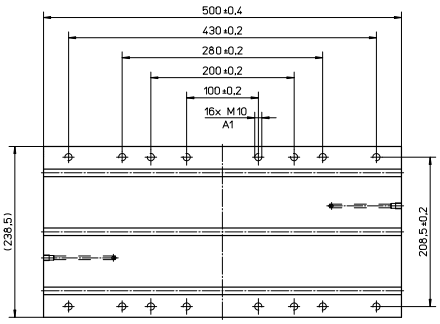


A1: depth 15

## Performance Specifications
for Units with Double Standard Carriage (Z)

| Parameter | | MLSM80Z |
|---|---|---|
| Stroke length (Smax), maximum | [mm] | 5680 |
| Total length (L tot), maximum | [mm] | 6680 |
| Minimum distance between carriages (Lc) | [mm] | 400 |
| Dynamic load (Fy), maximum | [N] | 12800 |
| Dynamic load (Fz), maximum | [N] | 12800 |
| Dynamic load torque (My), maximum | [Nm] | Lc[1] × 6,4 |
| Dynamic load torque (Mz), maximum | [Nm] | Lc[1] × 6,4 |
| Force required to move second carriage | [N] | 35 |
| Total length (L tot) | [mm] | Smax + 600 + Lc |

[1] Value in mm

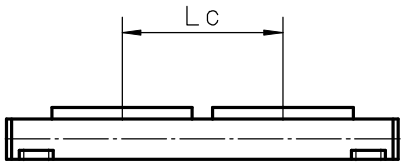

# Linear Motion Systems with Belt Drive and Slide Guide

## Overview

### Movopart M

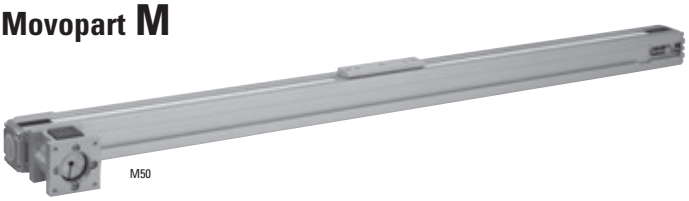


**Features**

- Can be installed in any orientation
- Patented self-adjusting prism slide guides
- Resistant to shock loads and vibrations
- Low cost

| Parameter | | M50 |
|---|---|---|
| Profile size (width × height) | [mm] | 50 × 50 |
| Stroke length (Smax), maximum | [mm] | 5000 |
| Linear speed, maximum | [m/s] | 5,0 |
| Dynamic carriage load (Fz), maximum | [N] | 400 |
| Remarks | | no cover band |
| Page | | 92 |

### Movopart M

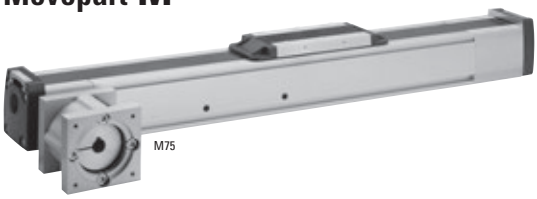


**Features**

- Can be installed in any orientation
- Self-adjusting stainless steel cover band
- Patented self-adjusting prism slide guides
- Wash down and enhanced wash down protected versions available

| Parameter | | M55 | M75 | M100 |
|---|---|---|---|---|
| Profile size (width × height) | [mm] | 58 × 55 | 86 × 75 | 108 × 100 |
| Stroke length (Smax), maximum | [mm] | 7000 | 12000 | 11900 |
| Linear speed, maximum | [m/s] | 5,0 | 5,0 | 5,0 |
| Dynamic carriage load (Fz), maximum | [N] | 400 | 1485 | 3005 |
| Remarks | | - | - | - |
| Page | | 94 | 96 | 98 |

# Linear Motion Systems with Belt Drive and Slide Guide

## Overview

## M-Series Technical Presentation

**Cover band**
The self-adjusting magnetically sealed stainless steel cover band protects the unit from the penetration of dirt, dust and liquids.

**Environmental protection**
The standard unit can operate in harsh environments but is also available in wash down or enhanced wash down protected versions for the toughest environments.

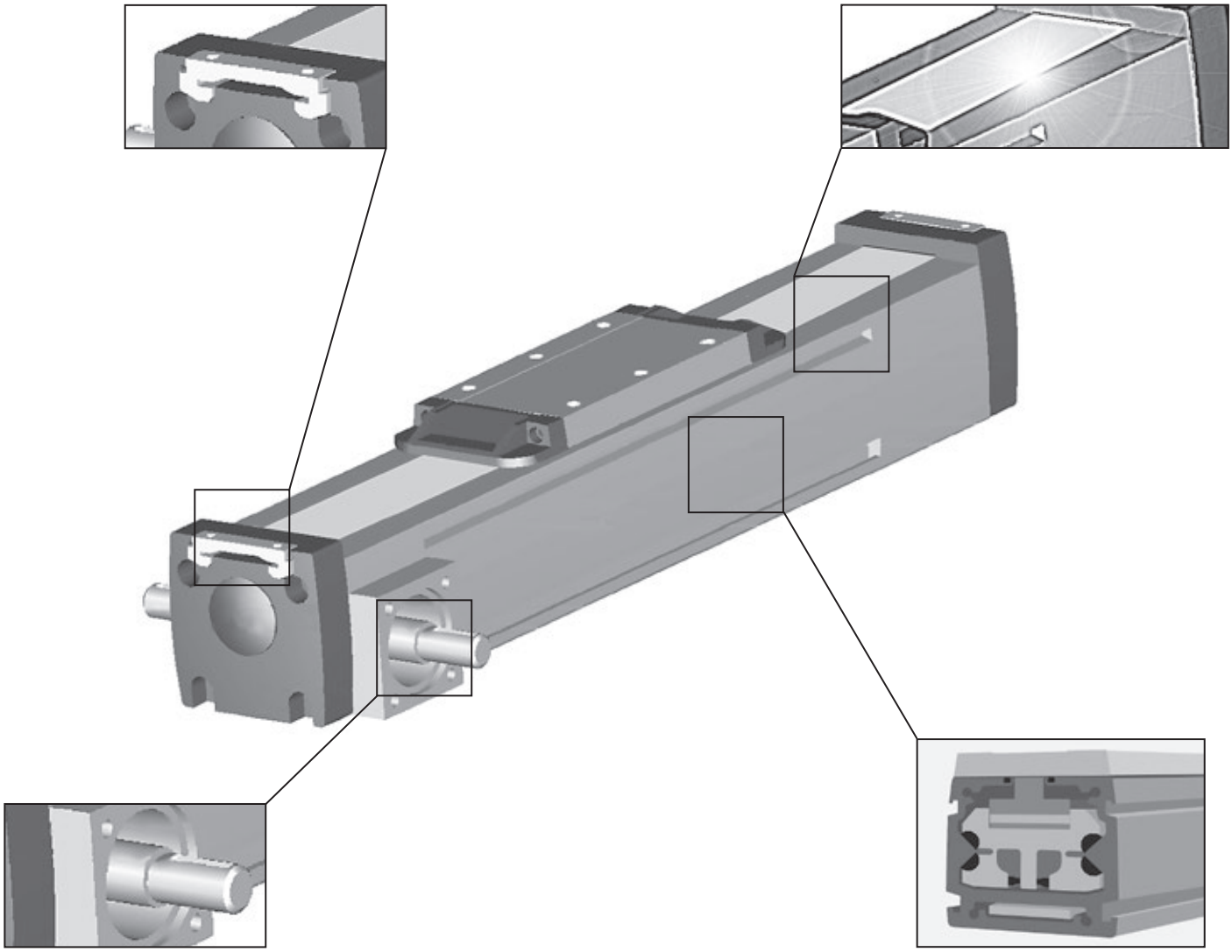

**Belt drive**
The belt runs on the inside of the profile and can easily be re-tensioned without removing the load from the carriage.

**Prism slide guides**
The patented self-aligning prism slide guides are accurate, durable and are resistant to vibrations and shock loads.

**Note! the unit is pictured without a RediMount™ flange**

# M50

## Belt Drive, Slide Guide

» Ordering key - see page 188
» Accessories - see page 117
» Additional data - see page 174

## General Specifications

| Parameter | M50 |
|---|---|
| Profile size (w × h) [mm] | 50 × 50 |
| Type of belt | GT 5MR-19 |
| Carriage sealing system | none |
| Adjustable belt tensioning | the belt can be retensioned by the customer if necessary |
| Lubrication | lubricated for life |
| Included accessories | none |

## Performance Specifications

for Units with Single Standard Carriage (A00)

| Parameter | | M50 |
|---|---|---|
| Stroke length (Smax), maximum | [mm] | 5000 |
| Total length (L tot), maximum | [mm] | 5296 |
| Linear speed, maximum | [m/s] | 5,0 |
| Acceleration, maximum | [m/s²] | 40 |
| Repeatability | [± mm] | 0,2 |
| Input speed, maximum | [rpm] | 2300 |
| Operation temperature limits | [°C] | -20 – 70 |
| Dynamic load (Fx), maximum<br>< 2,5 m/s<br>> 2,5 m/s | [N] | <br>400<br>200 |
| Dynamic load (Fy), maximum | [N] | 400 |
| Dynamic load (Fz), maximum | [N] | 400 |
| Dynamic load torque (Mx), maximum | [Nm] | 5 |
| Dynamic load torque (My), maximum | [Nm] | 21 |
| Dynamic load torque (Mz), maximum | [Nm] | 21 |
| Drive shaft force (Frd), maximum [1] | [N] | 350 |
| Input/drive shaft torque (Mta), maximum | [Nm] | 10 |
| Pulley diameter | [mm] | 41,38 |
| Stroke per shaft revolution | [mm] | 130 |
| Weight<br>of unit with zero stroke<br>of every 100 mm of stroke<br>of carriage | [kg] | <br>0,71<br>0,96<br>0,33 |

[1] Only relevant for units without RediMount flange.

## Carriage Idle Torque (M idle) [Nm]

| Input speed [rpm] | Idle torque [Nm] |
|---|---|
| 150 | 2,1 |

M idle = the input torque needed to move the carriage with no load on it.

## Deflection of the Profile

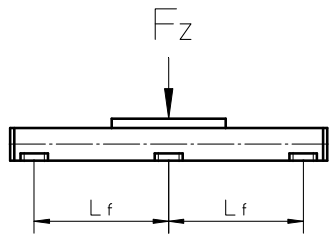


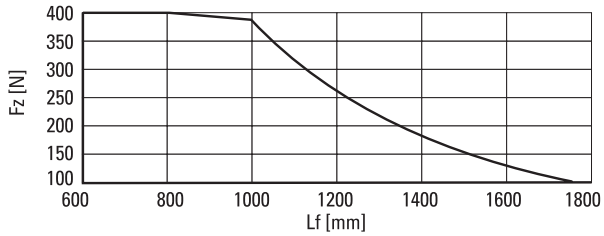


## Definition of Forces

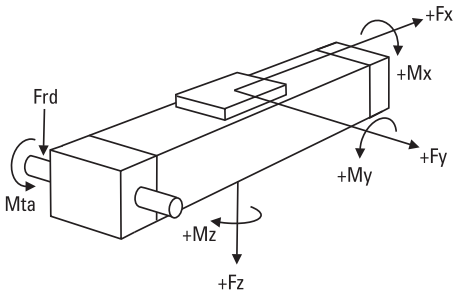

# M50

## Belt Drive, Slide Guide

| Dimensions | Projection | Online Sizing & Selection! |
|---|---|---|
| METRIC | | www.LinearMotioneering.com |

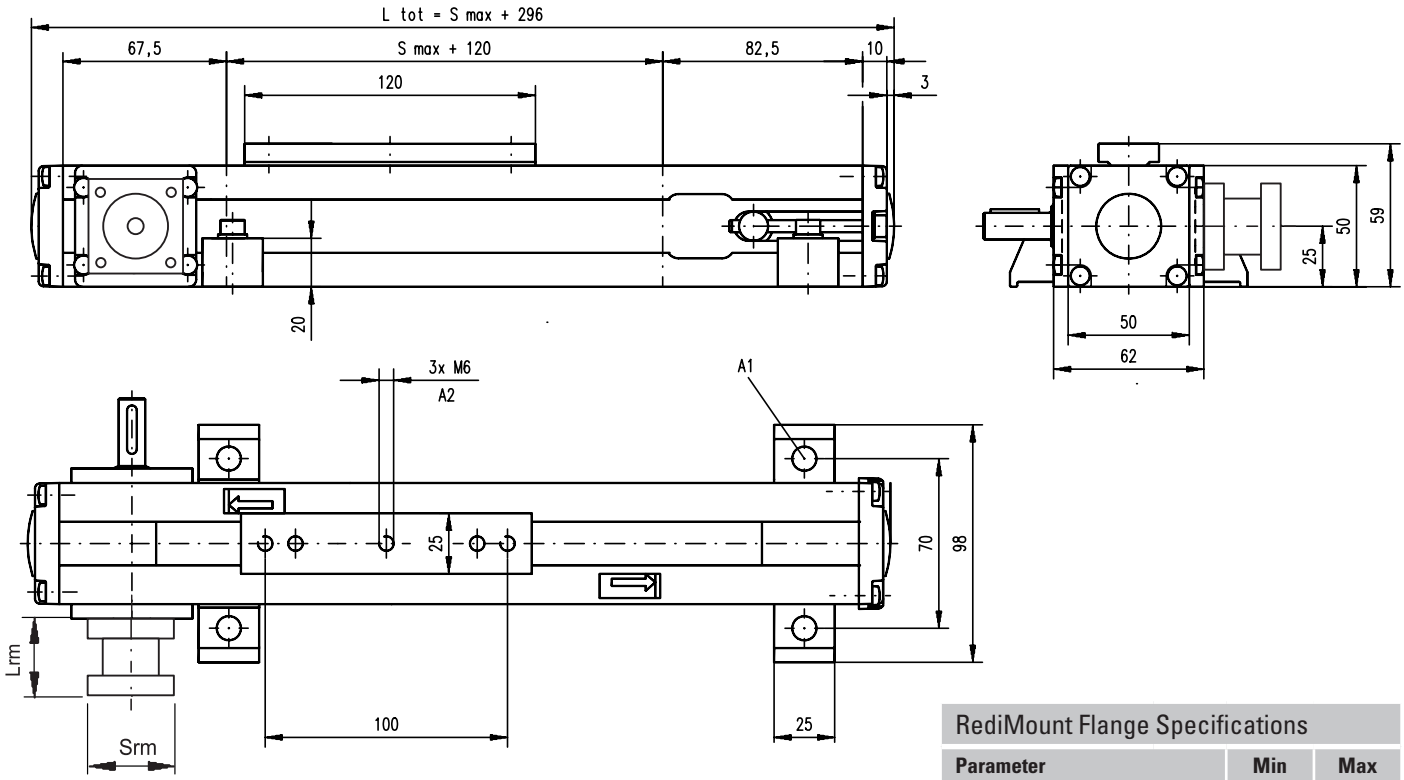


A1: ø6,5 for M6 screw
A2: depth 9, Heli coil

| RediMount Flange Specifications | | | |
|---|---|---|---|
| **Parameter** | | **Min** | **Max** |
| Flange length (Lrm) | [mm] | 57 | 92 |
| Flange square (Srm) | [mm] | 60 | 139 |
| Flange weight * | [kg] | 1,84 | |

* Max. weight including coupling and fastening screws

# M55

## Belt Drive, Slide Guide

» Ordering key - see page 188
» Accessories - see page 117
» Additional data - see page 174

## General Specifications

| Parameter | M55 |
|---|---|
| Profile size (w × h) [mm] | 58 × 50 |
| Type of belt | 22-STD SM5-HP |
| Carriage sealing system | self-adjusting steel cover band |
| Adjustable belt tensioning | the belt can be retensioned by the customer if necessary |
| Lubrication | lubricated for life |
| Included accessories | none |

## Performance Specifications

for Units with Single Standard Carriage (A)[1]

| Parameter | | M55 |
|---|---|---|
| Stroke length (Smax), maximum | [mm] | 7000 |
| Total length (L tot), maximum | [mm] | 7313 |
| Linear speed, maximum | [m/s] | 5,0 |
| Acceleration, maximum | [m/s²] | 40 |
| Repeatability | [± mm] | 0,2 |
| Input speed, maximum | [rpm] | 2850 |
| Operation temperature limits | [°C] | -20 – 70 |
| Dynamic load (Fx), maximum | [N] | |
| < 2,5 m/s | | 400 |
| > 2,5 m/s | | 200 |
| Dynamic load (Fy), maximum | [N] | 400 |
| Dynamic load (Fz), maximum | [N] | 400 |
| Dynamic load torque (Mx), maximum | [Nm] | 9 |
| Dynamic load torque (My), maximum | [Nm] | 21 |
| Dynamic load torque (Mz), maximum | [Nm] | 21 |
| Drive shaft force (Frd), maximum [2] | [N] | 200 |
| Input/drive shaft torque (Mta), maximum | [Nm] | 7 |
| Pulley diameter | [mm] | 33,42 |
| Stroke per shaft revolution | [mm] | 105 |
| Weight | [kg] | |
| of unit with zero stroke | | 4,10 |
| of every 100 mm of stroke | | 0,41 |
| of carriage | | 1,10 |

[1] See next page for deviating values of units with other carriage types.
[2] Only relevant for units without RediMount flange.

## Carriage Idle Torque (M idle) [Nm]

| Input speed [rpm] | Single Carriage | Double Carriages |
|---|---|---|
| 150 | 2,1 | 3,8 |

M idle = the input torque needed to move the carriage with no load on it.

## Deflection of the Profile

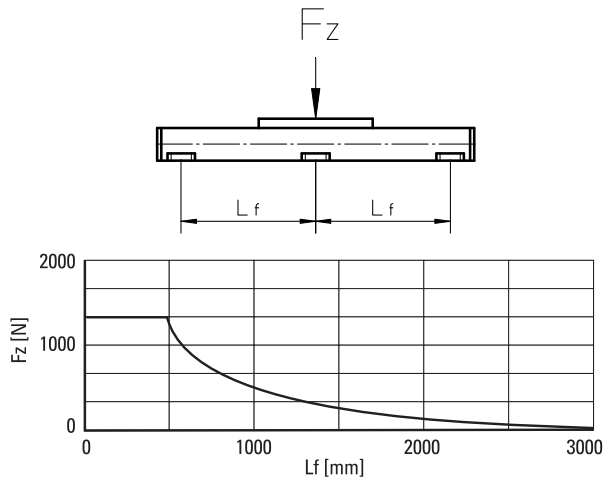


## Definition of Forces

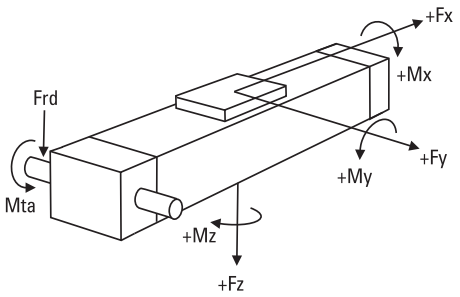

# M55

## Belt Drive, Slide Guide

| Dimensions | Projection | Online Sizing & Selection! |
|---|---|---|
| METRIC | | www.LinearMotioneering.com |

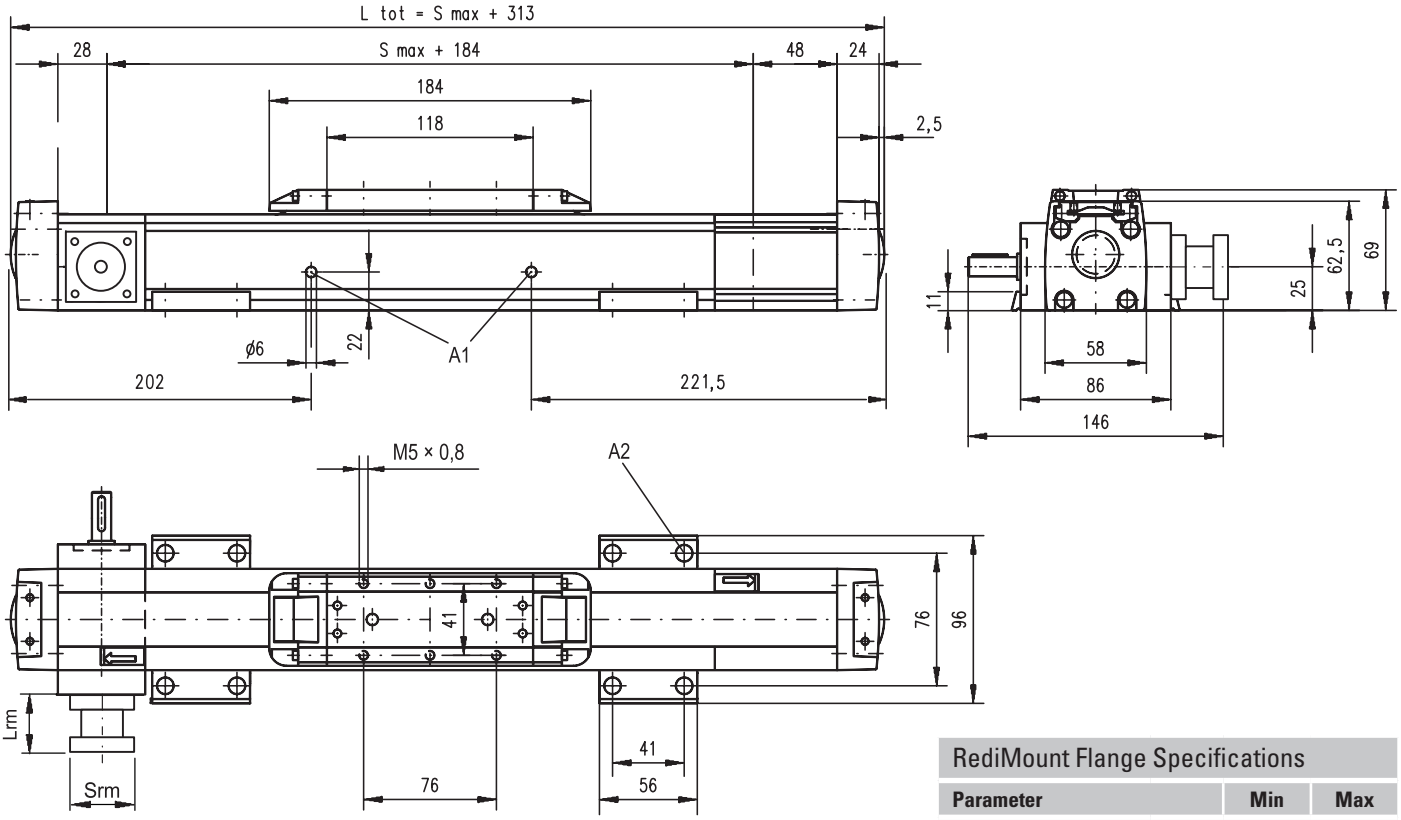


A1: slide guide tensioning holes
A2: ø9,5/ø5,5 for socket head cap screw M5

### RediMount Flange Specifications

| Parameter | | Min | Max |
|---|---|---|---|
| Flange length (Lrm) | [mm] | 57 | 92 |
| Flange square (Srm) | [mm] | 60 | 139 |
| Flange weight * | [kg] | 1,84 | |

* Max. weight including coupling and fastening screws

## Performance Specifications

for Units with Double Standard Carriage (C)

| Parameter | | M55 |
|---|---|---|
| Stroke length (Smax), maximum | [mm] | 6800 |
| Total length (L tot), maximum | [mm] | 7313 |
| Minimum distance between carriages (Lc) | [mm] | 200 |
| Dynamic load (Fy), maximum | [N] | 600 |
| Dynamic load (Fz), maximum | [N] | 600 |
| Dynamic load torque (My), maximum | [Nm] | Lc[1] × 0,3 |
| Dynamic load torque (Mz), maximum | [Nm] | Lc[1] × 0,3 |
| Force required to move second carriage | [N] | 35 |
| Total length (L tot] | [mm] | Smax + Lc + 313 |
| Weight<br>of unit with zero stroke<br>of carriages | [kg] | <br>6,00<br>2,20 |

[1] Value in mm

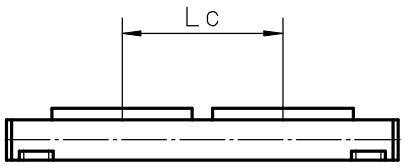

# M75

## Belt Drive, Slide Guide

» Ordering key - see page 188
» Accessories - see page 117
» Additional data - see page 174

## General Specifications

| Parameter | M75 |
|---|---|
| Profile size (w × h) [mm] | 86 × 75 |
| Type of belt | STD5-40 |
| Carriage sealing system | self-adjusting steel cover band |
| Adjustable belt tensioning | the belt can be retensioned by the customer if necessary |
| Lubrication | lubricated for life |
| Included accessories | none |

## Performance Specifications

for Units with Single Standard Carriage (A)[1]

| Parameter | | M75 |
|---|---|---|
| Stroke length (Smax), maximum | [mm] | 12000 |
| Total length (L tot), maximum | [mm] | 12368 |
| Linear speed, maximum | [m/s] | 5,0 |
| Acceleration, maximum | [m/s²] | 40 |
| Repeatability | [± mm] | 0,2 |
| Input speed, maximum | [rpm] | 2300 |
| Operation temperature limits | [°C] | -20 – 70 |
| Dynamic load (Fx), maximum | [N] | |
| < 2,5 m/s | | 900 |
| > 2,5 m/s | | 450 |
| Dynamic load (Fy), maximum | [N] | 1485 |
| Dynamic load (Fz), maximum | [N] | 1485 |
| Dynamic load torque (Mx), maximum | [Nm] | 49 |
| Dynamic load torque (My), maximum | [Nm] | 85 |
| Dynamic load torque (Mz), maximum | [Nm] | 85 |
| Drive shaft force (Frd), maximum [2] | [N] | 600 |
| Input/drive shaft torque (Mta), maximum | [Nm] | 30 |
| Pulley diameter | [mm] | 41,38 |
| Stroke per shaft revolution | [mm] | 130 |
| Weight | [kg] | |
| of unit with zero stroke | | 6,30 |
| of every 100 mm of stroke | | 0,67 |
| of carriage | | 1,50 |

[1] See next page for deviating values of units with other carriage types.
[2] Only relevant for units without RediMount flange.

## Carriage Idle Torque (M idle) [Nm]

| Input speed [rpm] | Single Carriage | Double Carriages |
|---|---|---|
| 150 | 2,2 | 4,0 |

M idle = the input torque needed to move the carriage with no load on it.

## Deflection of the Profile

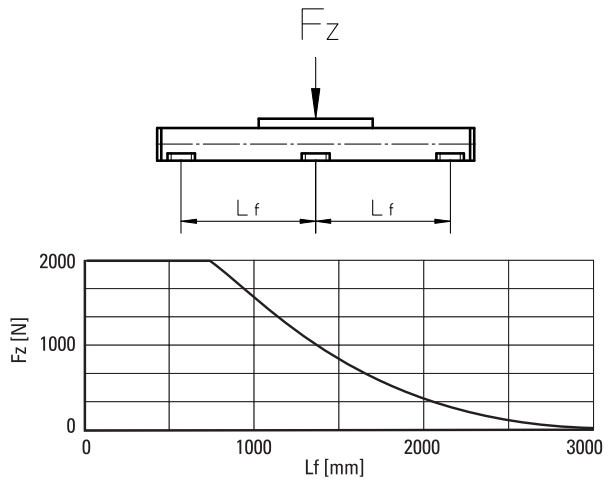


## Definition of Forces

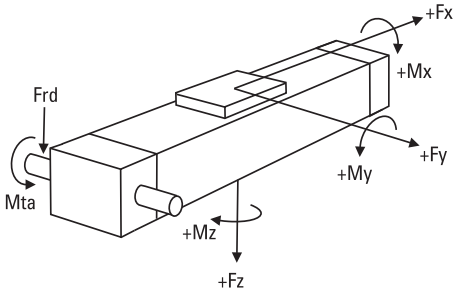

# M75

## Belt Drive, Slide Guide

| Dimensions | Projection | Online Sizing & Selection! |
|---|---|---|
| METRIC | | www.LinearMotioneering.com |

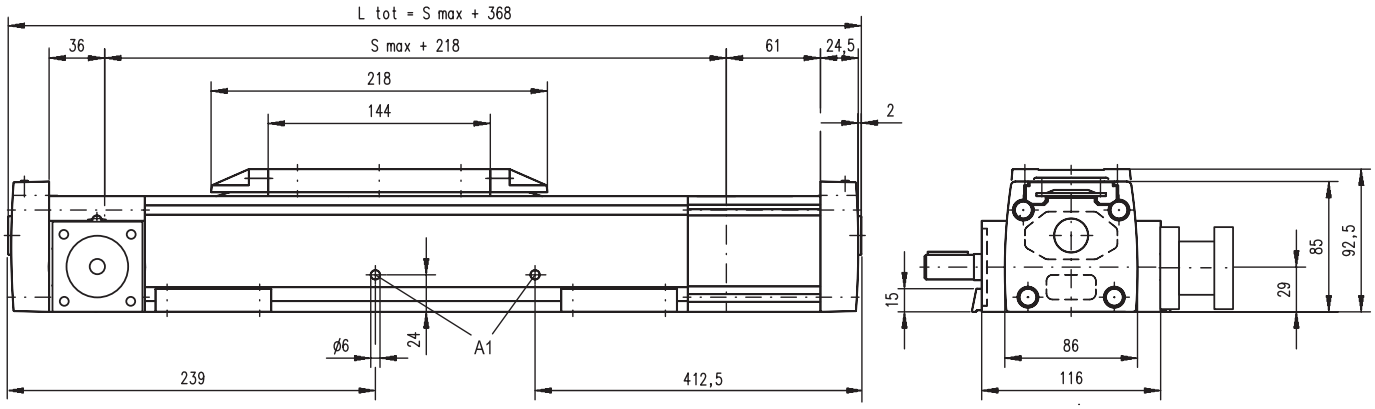


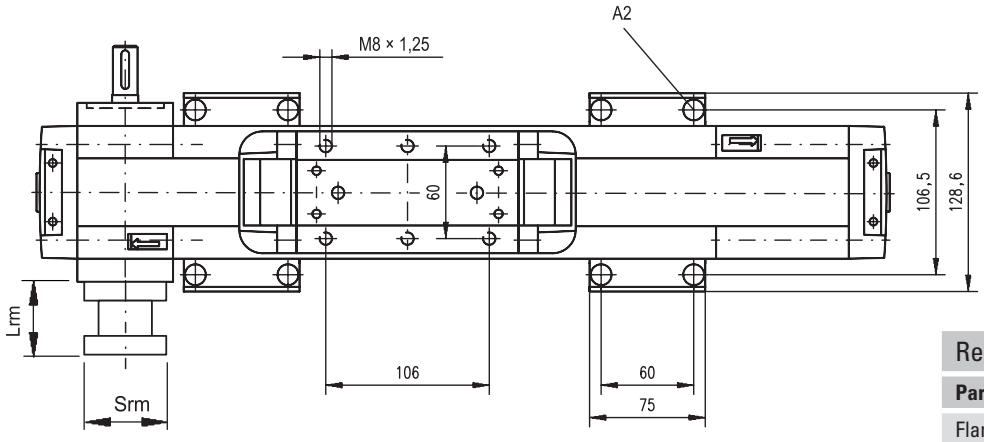


A1: slide guide tensioning holes
A2: ø13,5/ø8,5 for socket head cap screw M8

### RediMount Flange Specifications

| Parameter | | Min | Max |
|---|---|---|---|
| Flange length (Lrm) | [mm] | 81 | 143 |
| Flange square (Srm) | [mm] | 90 | 200 |
| Flange weight * | [kg] | 6,00 | |

* Max. weight including coupling and fastening screws

## Performance Specifications
for Units with Double Standard Carriage (C)

| Parameter | | M75 |
|---|---|---|
| Stroke length (Smax), maximum | [mm] | 11750 |
| Total length (L tot), maximum | [mm] | 12368 |
| Minimum distance between carriages (Lc) | [mm] | 250 |
| Dynamic load (Fy), maximum | [N] | 2227 |
| Dynamic load (Fz), maximum | [N] | 2227 |
| Dynamic load torque (My), maximum | [Nm] | Lc[1] × 1,114 |
| Dynamic load torque (Mz), maximum | [Nm] | Lc[1] × 1,114 |
| Force required to move second carriage | [N] | 40 |
| Total length (L tot] | [mm] | Smax + Lc + 368 |
| Weight<br>of unit with zero stroke<br>of carriages | [kg] | <br>9,50<br>3,00 |

[1] Value in mm

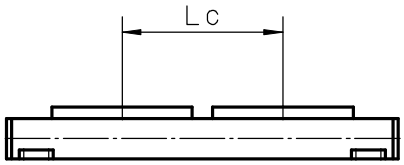

# M100

## Belt Drive, Slide Guide

» Ordering key - see page 188
» Accessories - see page 117
» Additional data - see page 174

## General Specifications

| Parameter | M100 |
|---|---|
| Profile size (w × h) [mm] | 108 × 100 |
| Type of belt | STD8-50 |
| Carriage sealing system | self-adjusting steel cover band |
| Adjustable belt tensioning | the belt can be retensioned by the customer if necessary |
| Lubrication | lubricated for life |
| Included accessories | none |

## Performance Specifications

for Units with Single Standard Carriage (A)[1]

| Parameter | | M100 |
|---|---|---|
| Stroke length (Smax), maximum | [mm] | 11900 |
| Total length (L tot), maximum | [mm] | 12331 |
| Linear speed, maximum | [m/s] | 5,0 |
| Acceleration, maximum | [m/s²] | 40 |
| Repeatability | [± mm] | 0,2 |
| Input speed, maximum | [rpm] | 1700 |
| Operation temperature limits | [°C] | -20 – 70 |
| Dynamic load (Fx), maximum<br>< 2,5 m/s<br>> 2,5 m/s | [N] | <br>1250<br>625 |
| Dynamic load (Fy), maximum | [N] | 3005 |
| Dynamic load (Fz), maximum | [N] | 3005 |
| Dynamic load torque (Mx), maximum | [Nm] | 117 |
| Dynamic load torque (My), maximum | [Nm] | 279 |
| Dynamic load torque (Mz), maximum | [Nm] | 279 |
| Drive shaft force (Frd), maximum[2] | [N] | 1000 |
| Input/drive shaft torque (Mta), maximum | [Nm] | 45 |
| Pulley diameter | [mm] | 56,02 |
| Stroke per shaft revolution | [mm] | 176 |
| Weight<br>of unit with zero stroke<br>of every 100 mm of stroke<br>of carriage | [kg] | <br>11,10<br>1,16<br>2,40 |

[1] See next page for deviating values of units with other carriage types.
[2] Only relevant for units without RediMount flange.

## Carriage Idle Torque (M idle) [Nm]

| Input speed [rpm] | Single Carriage | Double Carriages |
|---|---|---|
| 150 | 3,8 | 5,8 |

M idle = the input torque needed to move the carriage with no load on it.

## Deflection of the Profile

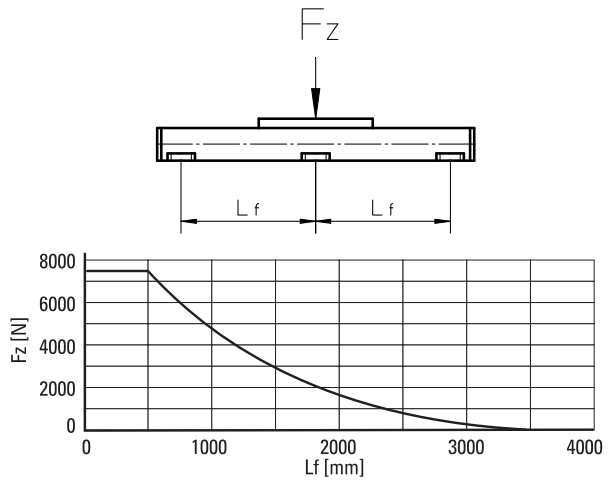


## Definition of Forces

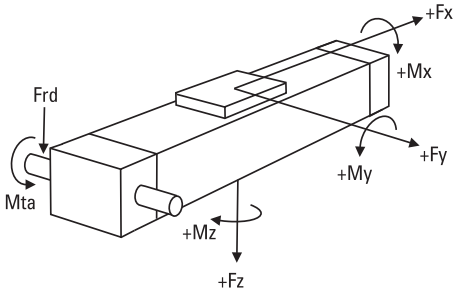

# M100

## Belt Drive, Slide Guide

| Dimensions | Projection | Online Sizing & Selection! |
|---|---|---|
| METRIC | | www.LinearMotioneering.com |

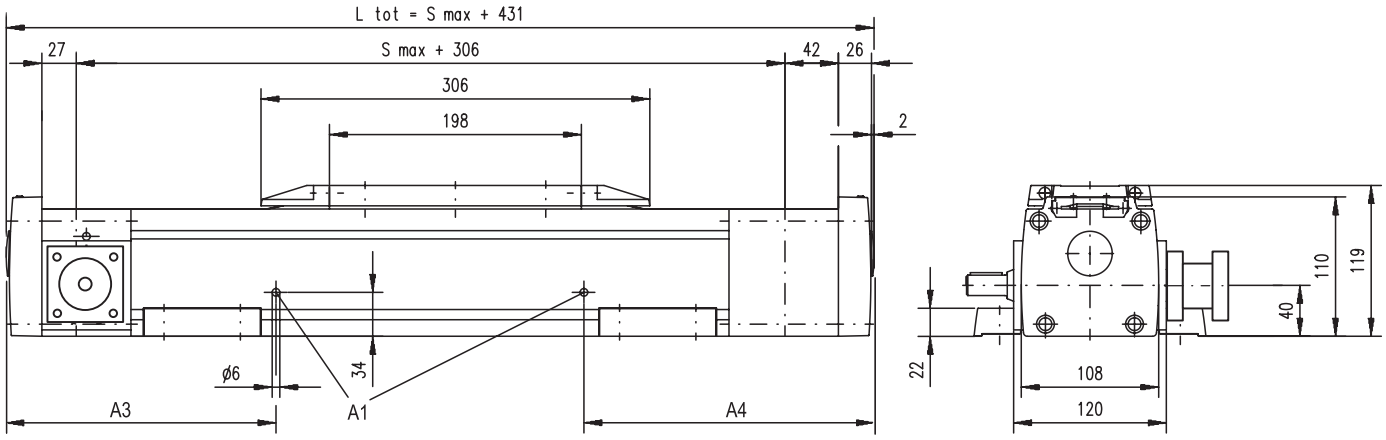


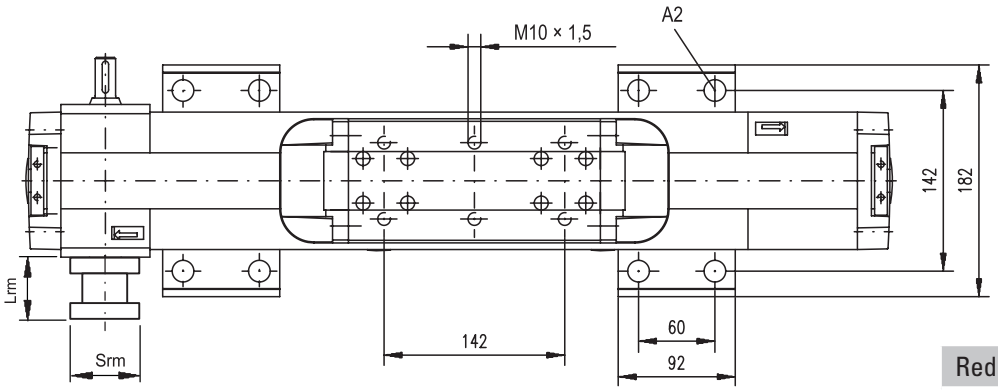


A1: slide guide tensioning holes
A2: ø17/ø10,5 for socket head cap screw M10
A3: 170 (L tot <= 1056 mm), 270 (L tot > 1056 mm)
A4: 186 (L tot < = 1056 mm), 436 (L tot > 1056 mm)

### RediMount Flange Specifications

| Parameter | | Min | Max |
|---|---|---|---|
| Flange length (Lrm) | [mm] | 81 | 143 |
| Flange square (Srm) | [mm] | 90 | 200 |
| Flange weight * | [kg] | 6,00 | |

* Max. weight including coupling and fastening screws

## Performance Specifications

for Units with Double Standard Carriage (C)

| Parameter | | M100 |
|---|---|---|
| Stroke length (Smax), maximum | [mm] | 11550 |
| Total length (L tot), maximum | [mm] | 12331 |
| Minimum distance between carriages (Lc) | [mm] | 350 |
| Dynamic load (Fy), maximum | [N] | 4508 |
| Dynamic load (Fz), maximum | [N] | 4508 |
| Dynamic load torque (My), maximum | [Nm] | Lc[1] × 2,254 |
| Dynamic load torque (Mz), maximum | [Nm] | Lc[1] × 2,254 |
| Force required to move second carriage | [N] | 45 |
| Total length (L tot] | [mm] | Smax + Lc + 431 |
| Weight<br>of unit with zero stroke<br>of carriages | [kg] | <br>17,40<br>4,80 |

[1] Value in mm

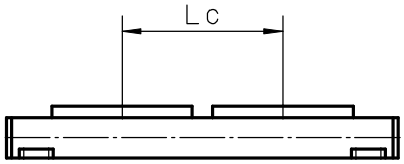

# Linear Units with Belt Drive and Wheel Guide

## Overview

### SpeedLine WH


**Features**

- Can be installed in any orientation
- Speed up to 11 m/s and stroke up to 11 m
- Acceleration up to 40 m/s$^2$
- Felt pad wipers cleaning the guides as standard

| Parameter | | WH50 | WH80 | WH120 |
|---|---|---|---|---|
| Profile size (width × height) | [mm] | 50 × 50 | 80 × 80 | 120 × 110 |
| Stroke length (Smax), maximum | [mm] | 3000 | 11000 | 11000 |
| Linear speed, maximum | [m/s] | 6,5 | 10,0 | 10,0 |
| Dynamic carriage load (Fz), maximum | [N] | 730 | 2100 | 9300 |
| Remarks | | external wheel guides no cover band | external wheel guides no cover band | external wheel guides no cover band |
| Page | | 102 | 104 | 106 |

## WH-Series Technical Presentation

**Belt tensioning**
The belt can easily be replaced or re-tensioned from the outside of the unit without the load being removed from the carriage.

**Belt drive**
The steel reinforced belt is wear resistant, highly efficient and very accurate even at high speeds and loads.

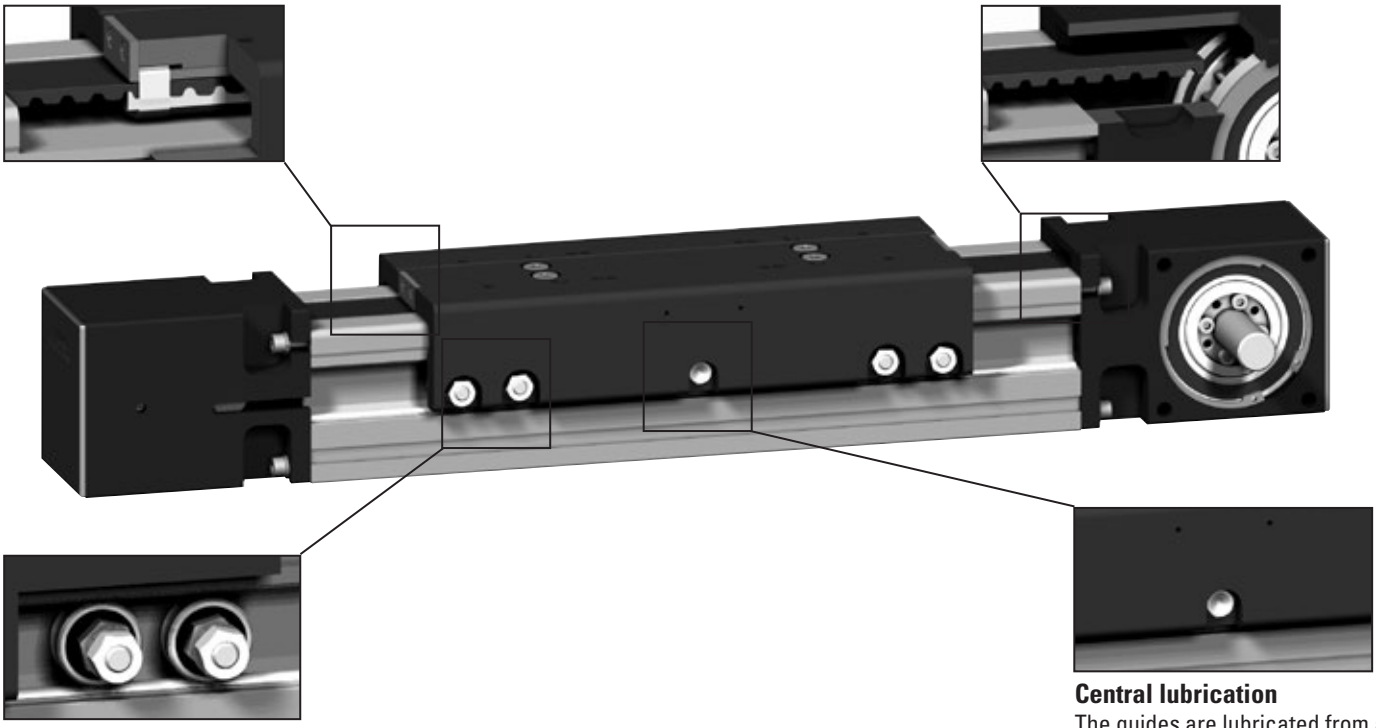

**Wheel guides**
The H-type arrangement of the guides allows fast moves and high forces and moments.

**Central lubrication**
The guides are lubricated from a central point that is easy and fast to access.

**Note! the unit is pictured without a RediMount™ flange**

# Linear Units with Belt Drive and Wheel Guide

## Overview

### ForceLine **MLSH**

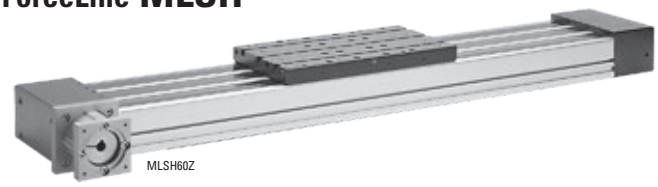


**Features**

- Can be installed in any orientation
- Patented plastic cover band
- Speed up to 10 m/s
- Low profile height

| Parameter | | MLSH60Z |
|---|---|---|
| Profile size (width × height) | [mm] | 160 × 65 |
| Stroke length (Smax), maximum | [mm] | 5500 |
| Linear speed, maximum | [m/s] | 10,0 |
| Dynamic carriage load (Fz), maximum | [N] | 3000 |
| Remarks | | internal wheel guides |
| Page | | 108 |

## MLSH-Series Technical Presentation

**Belt tensioning**
The belt can easily be re-tensioned from the outside of the unit without the load being removed from the carriage.

**Belt drive**
The highly dynamic and accurate belt is protected by the cover band ensuring long and trouble free operation.

**Cover band**
The patented cover band protects the interior of the unit from the penetration of dirt, dust and liquids.

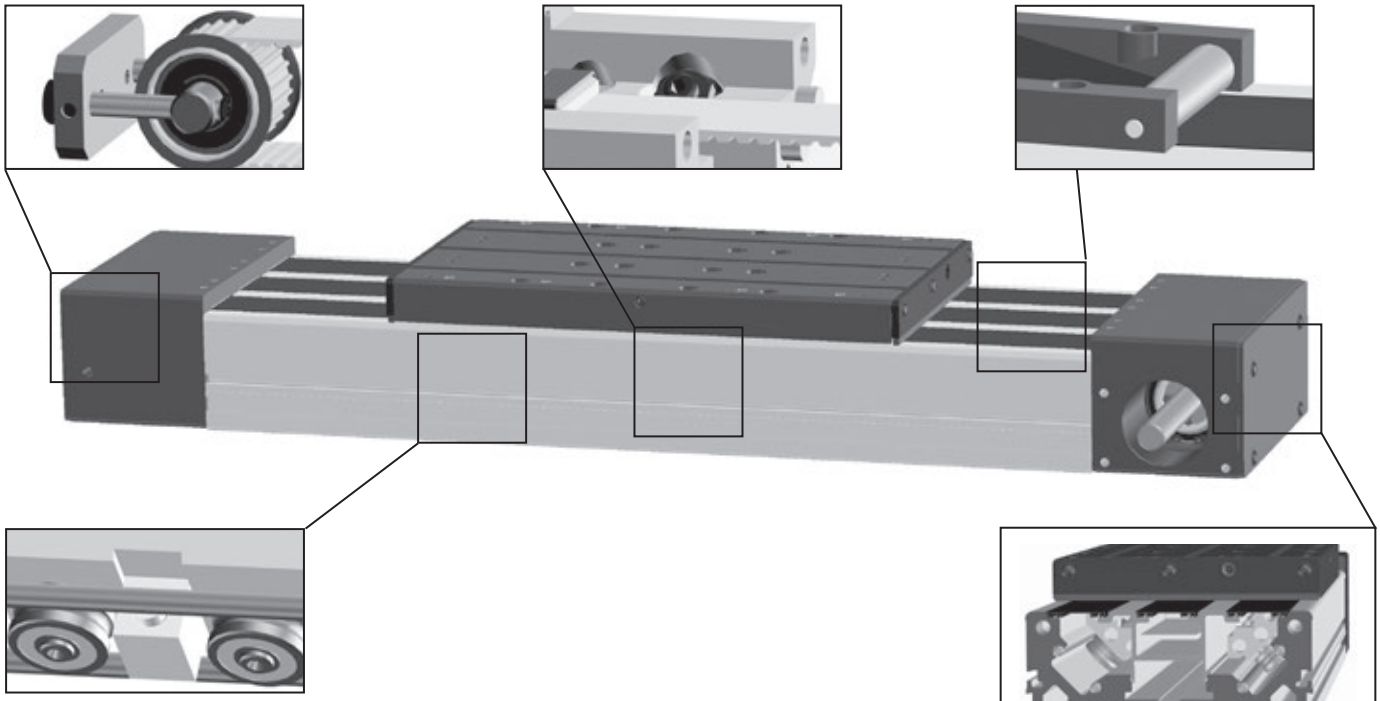

**Wheel guides**
The robust wheel guides run inside of the profile providing superior motion dynamics.

**Unique profile**
The unique design of the profile guarantees the highest performance and protection of the guides and belt.

**Note! the unit is pictured without a RediMount™ flange**

# WH50

## Belt Drive, Wheel Guide

» Ordering key - see page 189
» Accessories - see page 117
» Additional data - see page 174

## General Specifications

| Parameter | WH50 |
|---|---|
| Profile size (w × h) [mm] | 50 × 50 |
| Type of belt | 16ATL5 |
| Carriage sealing system | none |
| Adjustable belt tensioning | the belt can be retensioned by the customer if necessary |
| Lubrication | lubrication og guiding surfaces |
| Included accessories | 4 × mounting clamps |

## Performance Specifications

for Units with Single Standard Carriage (N)[1]

| Parameter | | WH50 |
|---|---|---|
| Stroke length (Smax), maximum | [mm] | 3000 |
| Total length (L tot), maximum | [mm] | 3440 |
| Linear speed, maximum | [m/s] | 6,5 |
| Acceleration, maximum | [m/s²] | 40 |
| Repeatability | [± mm] | 0,05 |
| Input speed, maximum | [rpm] | 3250 |
| Operation temperature limits | [°C] | 0 – 80 |
| Dynamic load (Fx), maximum | [N] | 670 [2] |
| Dynamic load (Fy), maximum | [N] | 415 |
| Dynamic load (Fz), maximum | [N] | 730 |
| Dynamic load torque (Mx), maximum | [Nm] | 16 |
| Dynamic load torque (My), maximum | [Nm] | 87 |
| Dynamic load torque (Mz), maximum | [Nm] | 50 |
| Drive shaft force (Frd), maximum [3] | [N] | 150 |
| Input/drive shaft torque (Mta), maximum | [Nm] | 17 |
| Pulley diameter | [mm] | 38,2 |
| Stroke per shaft revolution | [mm] | 120 |
| Weight | [kg] | |
| of unit with zero stroke | | 3,50 |
| of every 100 mm of stroke | | 0,44 |
| of each carriage | | 0,90 |

[1] See next page for deviating values of units with other carriage types.
[2] See diagram Force Fx.
[3] Only relevant for units without RediMount flange.

## Carriage Idle Torque, (M idle) [Nm]

| Input speed [rpm] | Idle torque [Nm] |
|---|---|
| 150 | 1,7 |
| 1500 | 2,4 |
| 3250 | 3,8 |

M idle = the input torque needed to move the carriage with no load on it.

## Deflection of the Profile

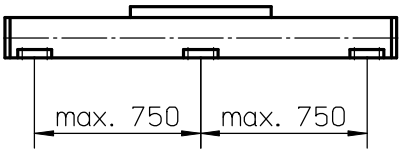


A mounting clamp must be installed at least every 750 mm to be able to operate at maximum load. Less clamps may be required if less load is being operated, see the additional technical data for more information.

## Force Fx as a Function of the Speed

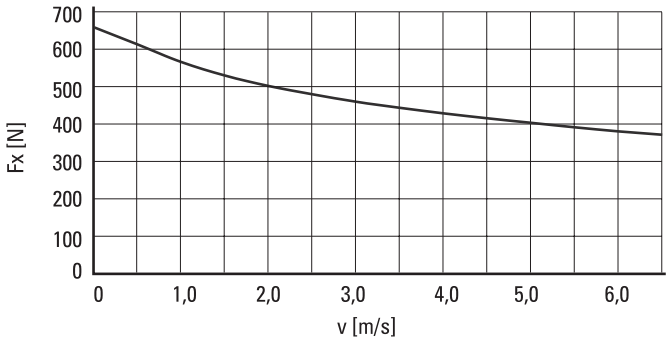


## Definition of Forces

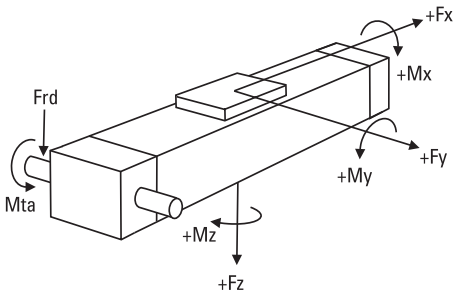

# WH50

## Belt Drive, Wheel Guide

| Dimensions | Projection | Online Sizing & Selection! |
|---|---|---|
| METRIC | | www.LinearMotioneering.com |

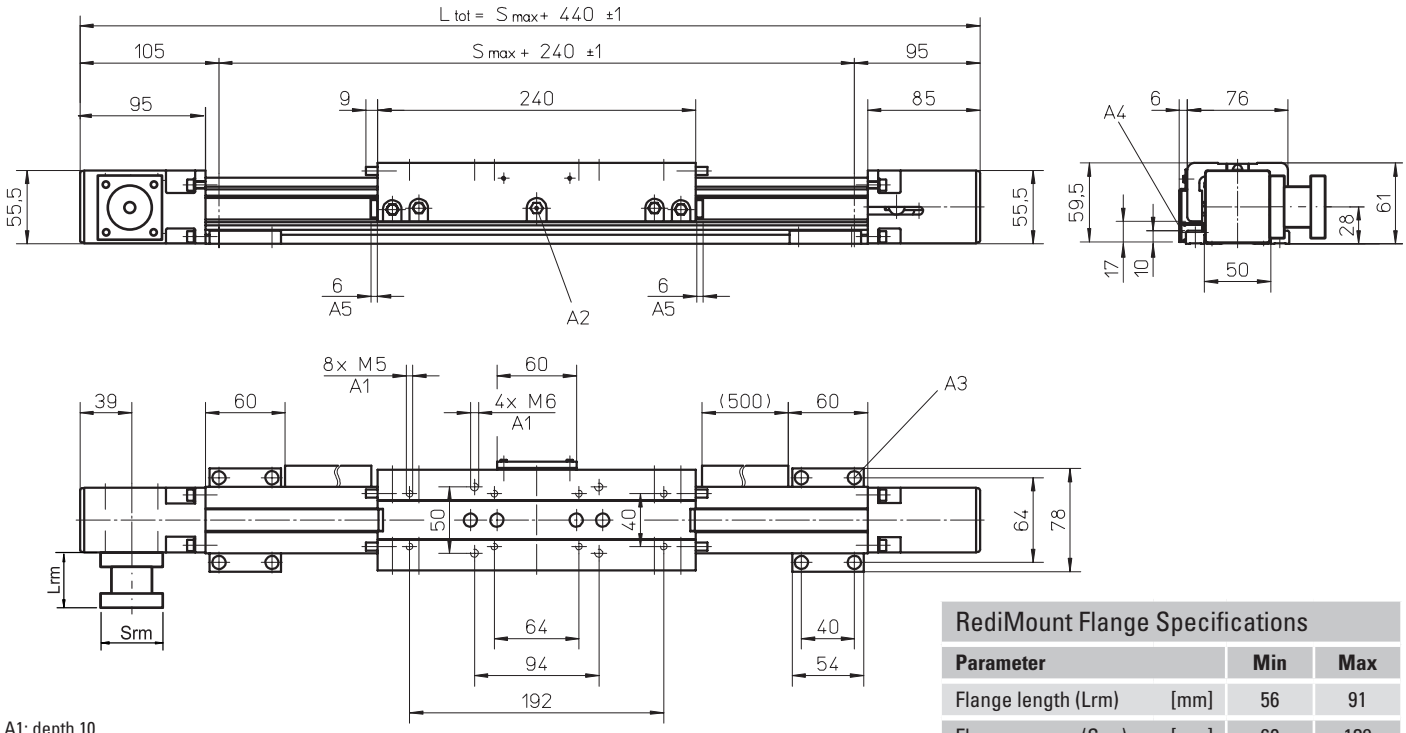


A1: depth 10
A2: funnel type lubricating nipple DIN3405-M6×1-D1
A3: socket cap screw ISO4762-M5×12 8.8
A4: ENF inductive sensor rail kit (optional - see page 150)
A5: felt pad wipers on both sides of the carriage

### RediMount Flange Specifications

| Parameter | | Min | Max |
|---|---|---|---|
| Flange length (Lrm) | [mm] | 56 | 91 |
| Flange square (Srm) | [mm] | 60 | 139 |
| Flange weight * | [kg] | 1,81 | |

* Max. weight including coupling and fastening screws

## Performance Specifications
for Units with Single Long Carriage (L)

| Parameter | | WH50 |
|---|---|---|
| Stroke length (Smax), maximum | [mm] | 3000 |
| Total length (L tot), maximum | [mm] | 3600 |
| Carriage length | [mm] | 400 |
| Dynamic load torque (My), maximum | [Nm] | 130 |
| Dynamic load torque (Mz), maximum | [Nm] | 75 |
| Weight | [kg] | 1,47 |

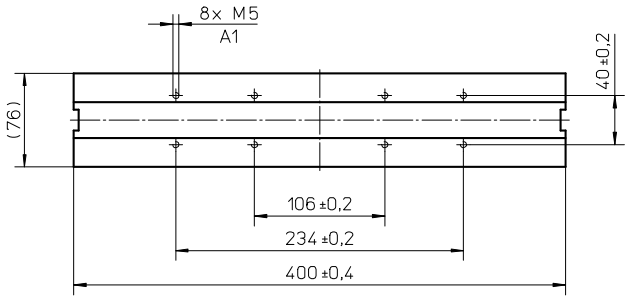


A1: depth 10

## Performance Specifications
for Units with Double Standard Carriage (Z)

| Parameter | | WH50 |
|---|---|---|
| Stroke length (Smax), maximum | [mm] | 2900 |
| Total length (L tot), maximum | [mm] | 3600 |
| Minimum distance between carriages (Lc) | [mm] | 260 |
| Dynamic load (Fy), maximum | [N] | 830 |
| Dynamic load (Fz), maximum | [N] | 1460 |
| Dynamic load torque (My), maximum | [Nm] | Lc[1] × 0,415 |
| Dynamic load torque (Mz), maximum | [Nm] | Lc[1] × 0,73 |
| Force required to move second carriage | [N] | 16 |
| Total length (L tot) | [mm] | Smax + 440 + Lc |

[1] Value in mm

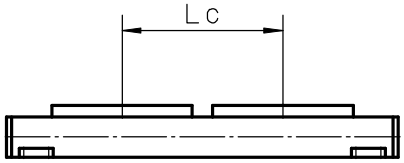

# WH80

## Belt Drive, Wheel Guide

» Ordering key - see page 189
» Accessories - see page 117
» Additional data - see page 174

## General Specifications

| Parameter | WH80 |
|---|---|
| Profile size (w × h) [mm] | 80 × 80 |
| Type of belt | 32ATL10 |
| Carriage sealing system | none |
| Adjustable belt tensioning | the belt can be retensioned by the customer if necessary |
| Lubrication | lubrication of guiding surfaces |
| Included accessories | 4 × mounting clamps |

## Performance Specifications

for Units with Single Standard Carriage (N)[1]

| Parameter | | WH80 |
|---|---|---|
| Stroke length (Smax), maximum | [mm] | 11000 |
| Total length (L tot), maximum | [mm] | 11550 |
| Linear speed, maximum | [m/s] | 10,0 |
| Acceleration, maximum | [m/s²] | 40 |
| Repeatability | [± mm] | 0,05 |
| Input speed, maximum | [rpm] | 3000 |
| Operation temperature limits | [°C] | 0 – 80 |
| Dynamic load (Fx), maximum | [N] | 2700 [2] |
| Dynamic load (Fy), maximum | [N] | 882 |
| Dynamic load (Fz), maximum | [N] | 2100 |
| Dynamic load torque (Mx), maximum | [Nm] | 75 |
| Dynamic load torque (My), maximum | [Nm] | 230 |
| Dynamic load torque (Mz), maximum | [Nm] | 100 |
| Drive shaft force (Frd), maximum [3] | [N] | 500 |
| Input/drive shaft torque (Mta), maximum | [Nm] | 100 |
| Pulley diameter | [mm] | 63,66 |
| Stroke per shaft revolution | [mm] | 200 |
| Weight | [kg] | |
| of unit with zero stroke | | 8,63 |
| of every 100 mm of stroke | | 0,93 |
| of each carriage | | 2,75 |

[1] See next page for deviating values of units with other carriage types.
[2] See diagram Force Fx.
[3] Only relevant for units without RediMount flange.

## Carriage Idle Torque, (M idle) [Nm]

| Input speed [rpm] | Idle torque [Nm] |
|---|---|
| 150 | 2,4 |
| 1500 | 3,5 |
| 3000 | 5,0 |

M idle = the input torque needed to move the carriage with no load on it.

## Deflection of the Profile

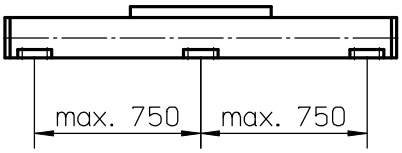


A mounting clamp must be installed at least every 750 mm to be able to operate at maximum load. Less clamps may be required if less load is being operated, see the additional technical data for more information. Units with a profile length over 6300 mm consist of two profiles where the joint between the two profiles must be adequately supported on both sides.

## Force Fx as a Function of the Speed

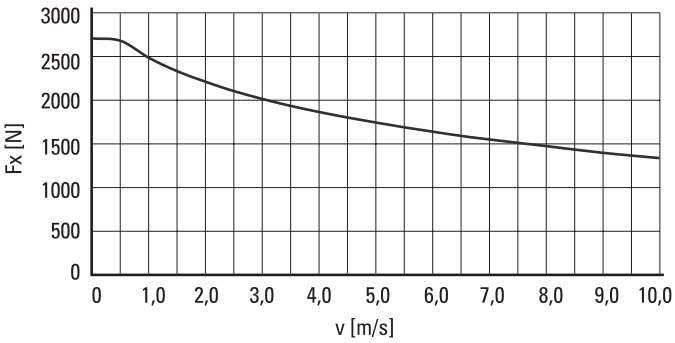


## Definition of Forces

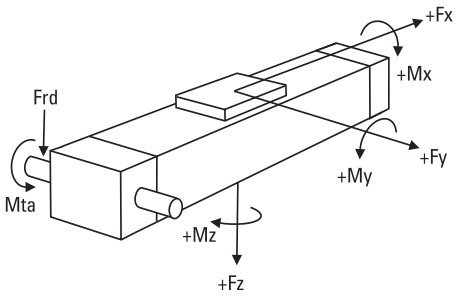

# WH80

## Belt Drive, Wheel Guide

| Dimensions | Projection | Online Sizing & Selection! |
|---|---|---|
| METRIC | | www.LinearMotioneering.com |

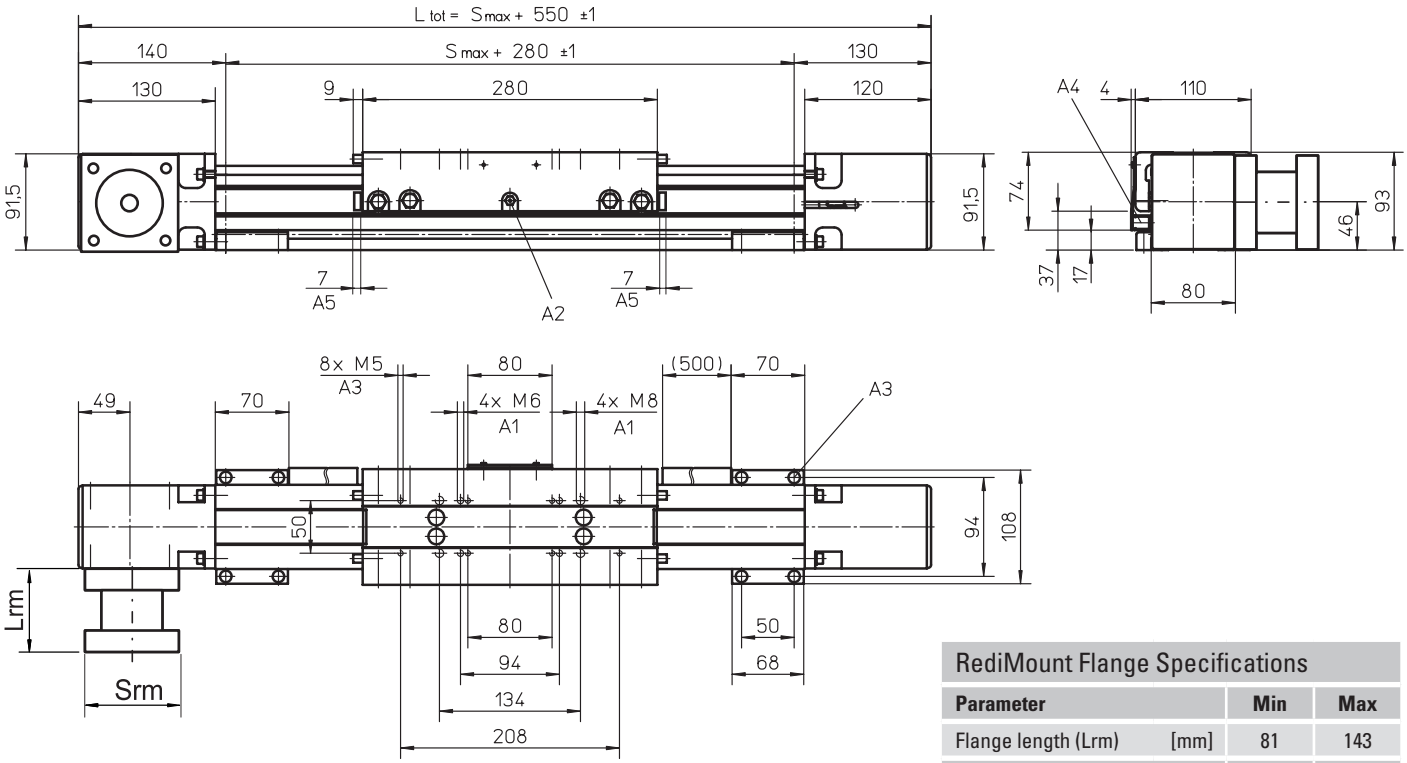


A1: depth 12
A2: funnel type lubricating nipple DIN3405-M6×1-D1
A3: socket cap screw ISO4762-M6×20 8.8
A4: ENF inductive sensor rail kit (optional - see page 150)
A5: felt pad wipers on both sides of the carriage

### RediMount Flange Specifications

| Parameter | | Min | Max |
|---|---|---|---|
| Flange length (Lrm) | [mm] | 81 | 143 |
| Flange square (Srm) | [mm] | 90 | 200 |
| Flange weight * | [kg] | 5,70 | |

* Max. weight including coupling and fastening screws

## Performance Specifications
for Units with Single Long Carriage (L)

| Parameter | | WH80 |
|---|---|---|
| Stroke length (Smax), maximum | [mm] | 11000 |
| Total length (L tot), maximum | [mm] | 11720 |
| Carriage length | [mm] | 450 |
| Dynamic load torque (My), maximum | [Nm] | 345 |
| Dynamic load torque (Mz), maximum | [Nm] | 150 |
| Weight | [kg] | 3,43 |

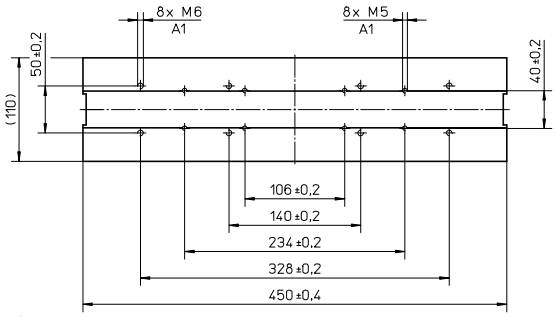


A1: depth 12

## Performance Specifications
for Units with Double Standard Carriage (Z)

| Parameter | | WH80 |
|---|---|---|
| Stroke length (Smax), maximum | [mm] | 10870 |
| Total length (L tot), maximum | [mm] | 11720 |
| Minimum distance between carriages (Lc) | [mm] | 300 |
| Dynamic load (Fy), maximum | [N] | 1764 |
| Dynamic load (Fz), maximum | [N] | 4200 |
| Dynamic load torque (My), maximum | [Nm] | Lc[1] × 0,882 |
| Dynamic load torque (Mz), maximum | [Nm] | Lc[1] × 2,1 |
| Force required to move second carriage | [N] | 20 |
| Total length (L tot) | [mm] | Smax + 550 + Lc |

[1] Value in mm

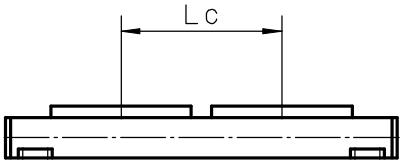

# WH120

## Belt Drive, Wheel Guide

» Ordering key - see page 189
» Accessories - see page 117
» Additional data - see page 174

## General Specifications

| Parameter | WH120 |
|---|---|
| Profile size (w × h) [mm] | 120 × 110 |
| Type of belt | 50ATL10 |
| Carriage sealing system | none |
| Adjustable belt tensioning | the belt can be retensioned by the customer if necessary |
| Lubrication | lubrication og guiding surfaces |
| Included accessories | 4 × mounting clamps |

## Performance Specifications

for Units with Single Standard Carriage (N)[1]

| Parameter | | WH120 |
|---|---|---|
| Stroke length (Smax), maximum | [mm] | 11000 |
| Total length (L tot), maximum | [mm] | 11605 |
| Linear speed, maximum | [m/s] | 10,0 |
| Acceleration, maximum | [m/s²] | 40 |
| Repeatability | [± mm] | 0,05 |
| Input speed, maximum | [rpm] | 2308 |
| Operation temperature limits | [°C] | 0 – 80 |
| Dynamic load (Fx), maximum | [N] | 5000 [2] |
| Dynamic load (Fy), maximum | [N] | 4980 |
| Dynamic load (Fz), maximum | [N] | 9300 |
| Dynamic load torque (Mx), maximum | [Nm] | 500 |
| Dynamic load torque (My), maximum | [Nm] | 930 |
| Dynamic load torque (Mz), maximum | [Nm] | 500 |
| Drive shaft force (Frd), maximum [3] | [N] | 700 |
| Input/drive shaft torque (Mta), maximum | [Nm] | 200 |
| Pulley diameter | [mm] | 82,76 |
| Stroke per shaft revolution | [mm] | 260 |
| Weight | [kg] | |
| of unit with zero stroke | | 17,00 |
| of every 100 mm of stroke | | 1,64 |
| of each carriage | | 5,50 |

[1] See next page for deviating values of units with other carriage types.
[2] See diagram Force Fx.
[2] Only relevant for units without RediMount flange.

## Carriage Idle Torque, (M idle) [Nm]

| Input speed [rpm] | Idle torque [Nm] |
|---|---|
| 150 | 4,8 |
| 1500 | 7,0 |
| 2308 | 10,0 |

M idle = the input torque needed to move the carriage with no load on it.

## Deflection of the Profile

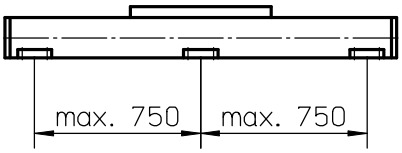


A mounting clamp must be installed at least every 750 mm to be able to operate at maximum load. Less clamps may be required if less load is being operated, see the additional technical data for more information. Units with a profile length over 4900 mm consist of two profiles where the joint between the two profiles must be adequately supported on both sides.

## Force Fx as a Function of the Speed

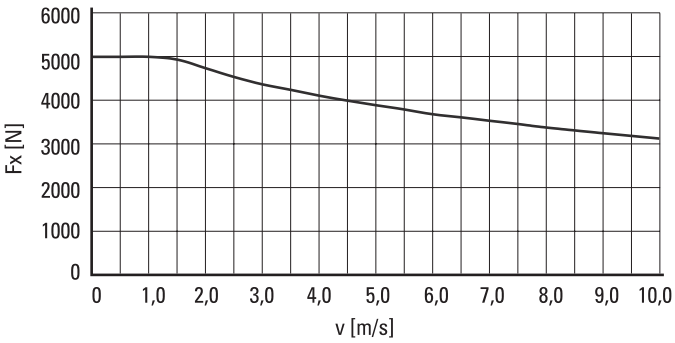


## Definition of Forces

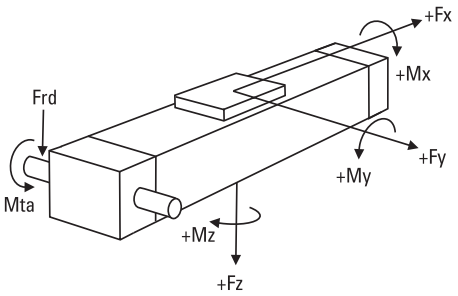

# WH120

## Belt Drive, Wheel Guide

| Dimensions | Projection | Online Sizing & Selection! |
|---|---|---|
| METRIC | | www.LinearMotioneering.com |

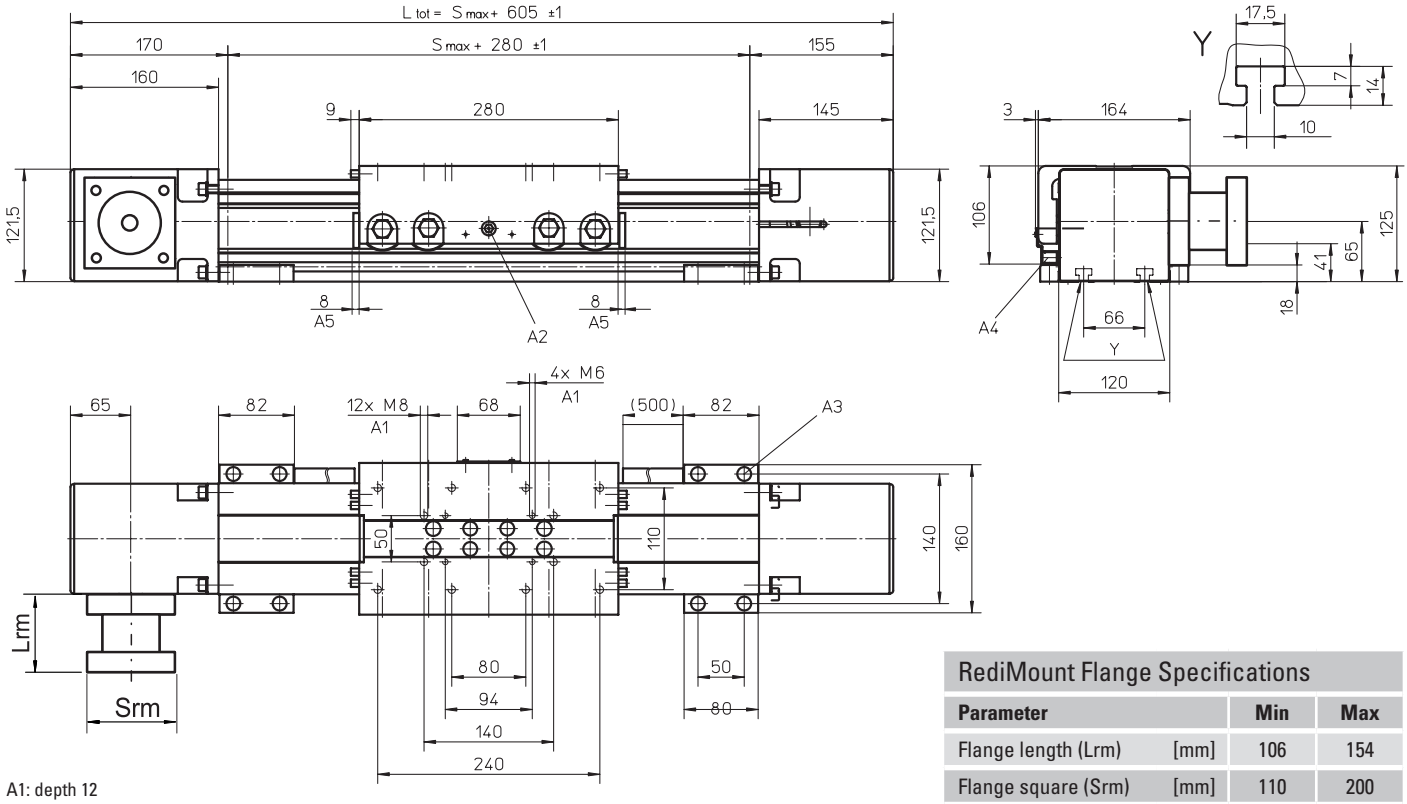


A1: depth 12
A2: funnel type lubricating nipple DIN3405-M6×1-D1
A3: socket cap screw ISO4762-M8×20 8.8
A4: ENF inductive sensor rail kit (optional - see page 150)
A5: felt pad wipers on both sides of the carriage

### RediMount Flange Specifications

| Parameter | | Min | Max |
|---|---|---|---|
| Flange length (Lrm) | [mm] | 106 | 154 |
| Flange square (Srm) | [mm] | 110 | 200 |
| Flange weight * | [kg] | 5,97 | |

* Max. weight including coupling and fastening screws

## Performance Specifications
for Units with Single Long Carriage (L)

| Parameter | | WH120 |
|---|---|---|
| Stroke length (Smax), maximum | [mm] | 11000 |
| Total length (L tot), maximum | [mm] | 11845 |
| Carriage length | [mm] | 520 |
| Dynamic load torque (My), maximum | [Nm] | 1395 |
| Dynamic load torque (Mz), maximum | [Nm] | 750 |
| Weight | [kg] | 8,67 |

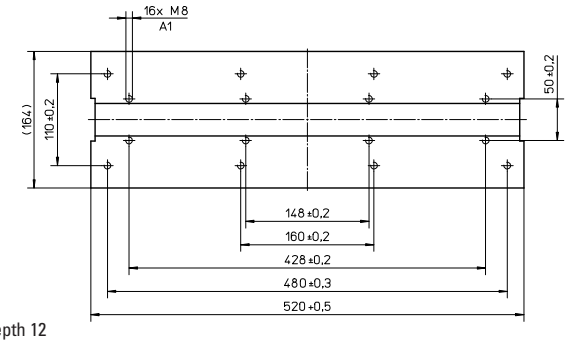


A1: depth 12

## Performance Specifications
for Units with Double Standard Carriage (Z)

| Parameter | | WH120 |
|---|---|---|
| Stroke length (Smax), maximum | [mm] | 10940 |
| Total length (L tot), maximum | [mm] | 11845 |
| Minimum distance between carriages (Lc) | [mm] | 300 |
| Dynamic load (Fy), maximum | [N] | 9960 |
| Dynamic load (Fz), maximum | [N] | 18600 |
| Dynamic load torque (My), maximum | [Nm] | Lc[1] × 4,98 |
| Dynamic load torque (Mz), maximum | [Nm] | Lc[1] × 9,3 |
| Force required to move second carriage | [N] | 30 |
| Total length (L tot) | [mm] | Smax + 605 + Lc |

[1] Value in mm

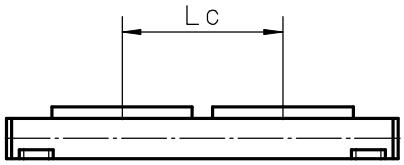

# MLSH60Z

## Belt Drive, Wheel Guide

» Ordering key - see page 190
» Accessories - see page 117
» Additional data - see page 174

## General Specifications

| Parameter | MLSH60Z |
|---|---|
| Profile size (w × h) [mm] | 160 × 65 |
| Type of belt | 32ATL5 |
| Carriage sealing system | plastic cover band |
| Adjustable belt tensioning | the belt can be retensioned by the customer if necessary |
| Lubrication | no lubrication required |
| Included accessories | 4 × mounting clamps |

## Performance Specifications

for Units with Single Standard Carriage (N)[1]

| Parameter | | MLSH60Z |
|---|---|---|
| Stroke length (Smax), maximum | [mm] | 5500 |
| Total length (L tot), maximum | [mm] | 5980 |
| Linear speed, maximum | [m/s] | 6,5 |
| Acceleration, maximum | [m/s²] | 40 |
| Repeatability | [± mm] | 0,05 |
| Input speed, maximum | [rpm] | 3000 |
| Operation temperature limits | [°C] | 0 – 80 |
| Dynamic load (Fx), maximum | [N] | 1480 [2] |
| Dynamic load (Fy), maximum | [N] | 3000 |
| Dynamic load (Fz), maximum | [N] | 3000 |
| Dynamic load torque (Mx), maximum | [Nm] | 165 |
| Dynamic load torque (My), maximum | [Nm] | 310 |
| Dynamic load torque (Mz), maximum | [Nm] | 310 |
| Drive shaft force (Frd), maximum [3] | [N] | 200 |
| Input/drive shaft torque (Mta), maximum | [Nm] | 45 |
| Pulley diameter | [mm] | 42,97 |
| Stroke per shaft revolution | [mm] | 135 |
| Weight | [kg] | |
| of unit with zero stroke | | 12,60 |
| of every 100 mm of stroke | | 1,33 |
| of each carriage | | 3,90 |

[1] See next page for deviating values of units with other carriage types.
[2] See diagram Force Fx.
[3] Only relevant for units without RediMount flange.

## Carriage Idle Torque, (M idle) [Nm]

| Input speed [rpm] | Idle torque [Nm] |
|---|---|
| 150 | 4,6 |
| 1500 | 9,0 |
| 3000 | 12,0 |

M idle = the input torque needed to move the carriage with no load on it.

## Deflection of the Profile

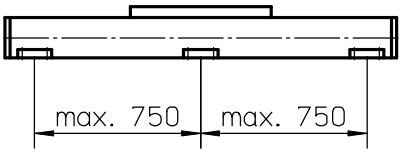


A mounting clamp must be installed at least every 750 mm to be able to operate at maximum load. Less clamps may be required if less load is being operated, see the additional technical data for more information.

## Force Fx as a Function of the Speed

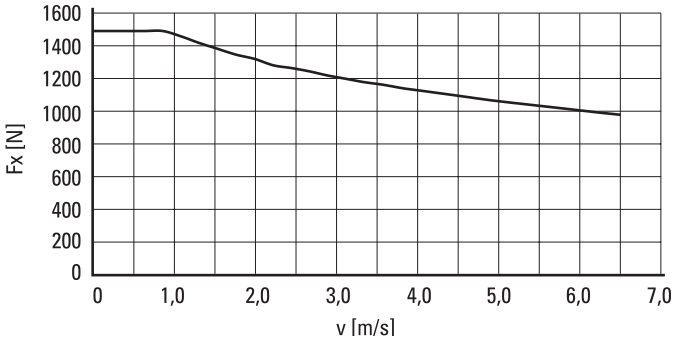


## Definition of Forces

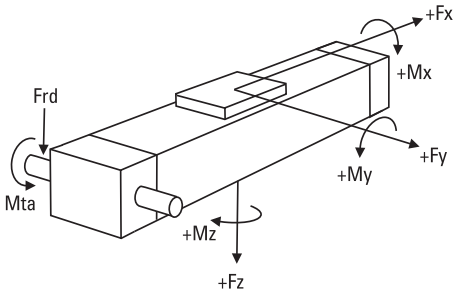

# MLSH60Z

## Belt Drive, Wheel Guide

| Dimensions | Projection | Online Sizing & Selection! |
|---|---|---|
| METRIC | | www.LinearMotioneering.com |

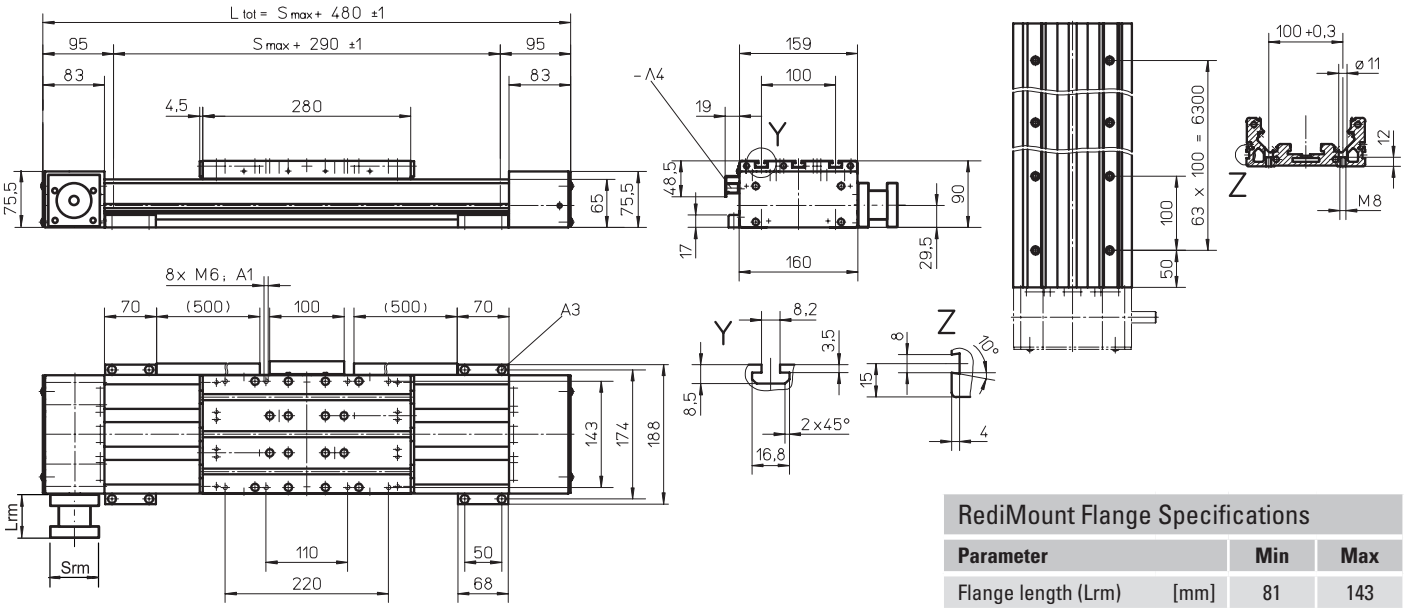


A1: depth 10
A2: depth 4
A3: socket cap screw ISO4762-M6x20 8.8
A4: ENF inductive sensor rail kit (optional - see page 150)

### RediMount Flange Specifications

| Parameter | | Min | Max |
|---|---|---|---|
| Flange length (Lrm) | [mm] | 81 | 143 |
| Flange square (Srm) | [mm] | 90 | 200 |
| Flange weight * | [kg] | 5,58 | |

* Max. weight including coupling and fastening screws

## Performance Specifications
for Units with Single Long Carriage (L)

| Parameter | | MLSH60Z |
|---|---|---|
| Stroke length (Smax), maximum | [mm] | 5500 |
| Total length (L tot), maximum | [mm] | 6150 |
| Carriage length | [mm] | 450 |
| Dynamic load torque (My), maximum | [Nm] | 585 |
| Dynamic load torque (Mz), maximum | [Nm] | 585 |
| Weight | [kg] | 6 |

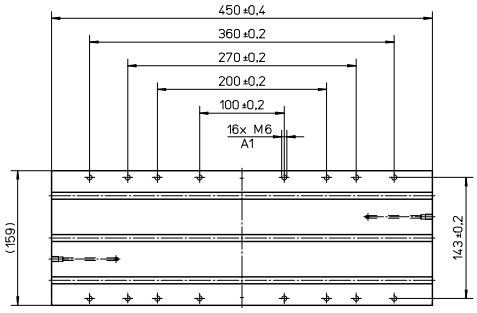


A1: depth 10

## Performance Specifications
for Units with Double Standard Carriage (Z)

| Parameter | | MLSH60Z |
|---|---|---|
| Stroke length (Smax), maximum | [mm] | 5380 |
| Total length (L tot), maximum | [mm] | 6150 |
| Minimum distance between carriages (Lc) | [mm] | 290 |
| Dynamic load (Fy), maximum | [N] | 6000 |
| Dynamic load (Fz), maximum | [N] | 6000 |
| Dynamic load torque (My), maximum | [Nm] | Lc[1] × 3 |
| Dynamic load torque (Mz), maximum | [Nm] | Lc[1] × 3 |
| Force required to move second carriage | [N] | 10 |
| Total length (L tot) | [mm] | Smax + 480 + Lc |

[1] Value in mm

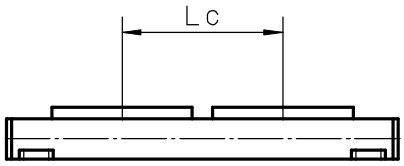

# Linear Lifting Units

## Overview

### SpeedLine WHZ


**Features**

- Can be installed in any orientation
- Belt drive
- External wheel guides
- Speed up to 10 m/s
- Acceleration up to 40 m/s$^2$

| Parameter | | WHZ50 | WHZ80 |
|---|---|---|---|
| Profile size (width × length) | [mm] | 50 × 50 | 80 × 80 |
| Stroke length (Smax), maximum | [mm] | 1500 | 3000 |
| Linear speed, maximum | [m/s] | 6,5 | 10,0 |
| Dynamic load (Fx), maximum | [N] | 670 | 1480 |
| Remarks | | The load is always attached to the end of the lifting profile | The load is always attached to the end of the lifting profile |
| Page | | 112 | 114 |

# WHZ50

## Belt Drive, Wheel Guide

» Ordering key - see page 191
» Accessories - see page 117
» Additional data - see page 175

## General Specifications

| Parameter | WHZ50 |
|---|---|
| Profile size (w × h) [mm] | 50 × 50 |
| Type of belt | 16 ATL 5 |
| Carriage sealing system | none |
| Adjustable belt tensioning | the belt can be retensioned by the customer if necessary |
| Lubrication | lubrication of carriage and guide surfaces |
| Included accessories | - |

## Performance Specifications

for Units with Single Standard Carriage (N)[1]

| Parameter | | WHZ50 |
|---|---|---|
| Stroke length (Smax), maximum | [mm] | 1500 |
| Total length (L tot), maximum | [mm] | 1850 |
| Linear speed, maximum | [m/s] | 6,5 |
| Acceleration, maximum | [m/s²] | 40 |
| Repeatability | [± mm] | 0,05 |
| Input speed, maximum | [rpm] | 3250 |
| Operation temperature limits | [°C] | 0 – 80 |
| Dynamic load (Fx), maximum | [N] | 670 [2] |
| Dynamic load (Fy), maximum | [N] | 415 |
| Dynamic load (Fz), maximum | [N] | 730 |
| Dynamic load torque (Mx), maximum | [Nm] | 16 |
| Dynamic load torque (My), maximum | [Nm] | 87 |
| Dynamic load torque (Mz), maximum | [Nm] | 50 |
| Drive shaft force (Frd), maximum [3] | [N] | 150 |
| Input/drive shaft torque (Mta), maximum | [Nm] | 17 |
| Pulley diameter | [mm] | 38,2 |
| Stroke per shaft revolution | [mm] | 120 |
| Weight | [kg] | |
| of unit with zero stroke | | 4,50 |
| of every 100 mm of stroke | | 0,42 |
| of each drive station box | | 2,90 |

[1] See next page for deviating values of units with other carriage types.
[2] See diagram Force Fx.
[3] Only relevant for units without RediMount flange.

## Carriage Idle Torque, (M idle) [Nm]

| Input speed [rpm] | Idle torque [Nm] |
|---|---|
| 150 | 1,7 |
| 1500 | 2,4 |
| 3250 | 3,8 |

M idle = the input torque needed to move the carriage with no load on it.

## Force Fx as a Function of the Speed

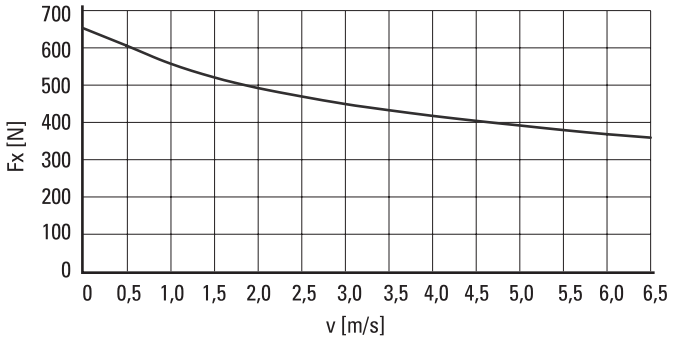


## Definition of Forces

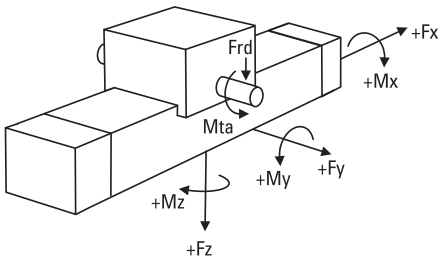

# WHZ50

## Belt Drive, Wheel Guide

| Dimensions | Projection | Online Sizing & Selection! |
|---|---|---|
| METRIC | | www.LinearMotioneering.com |

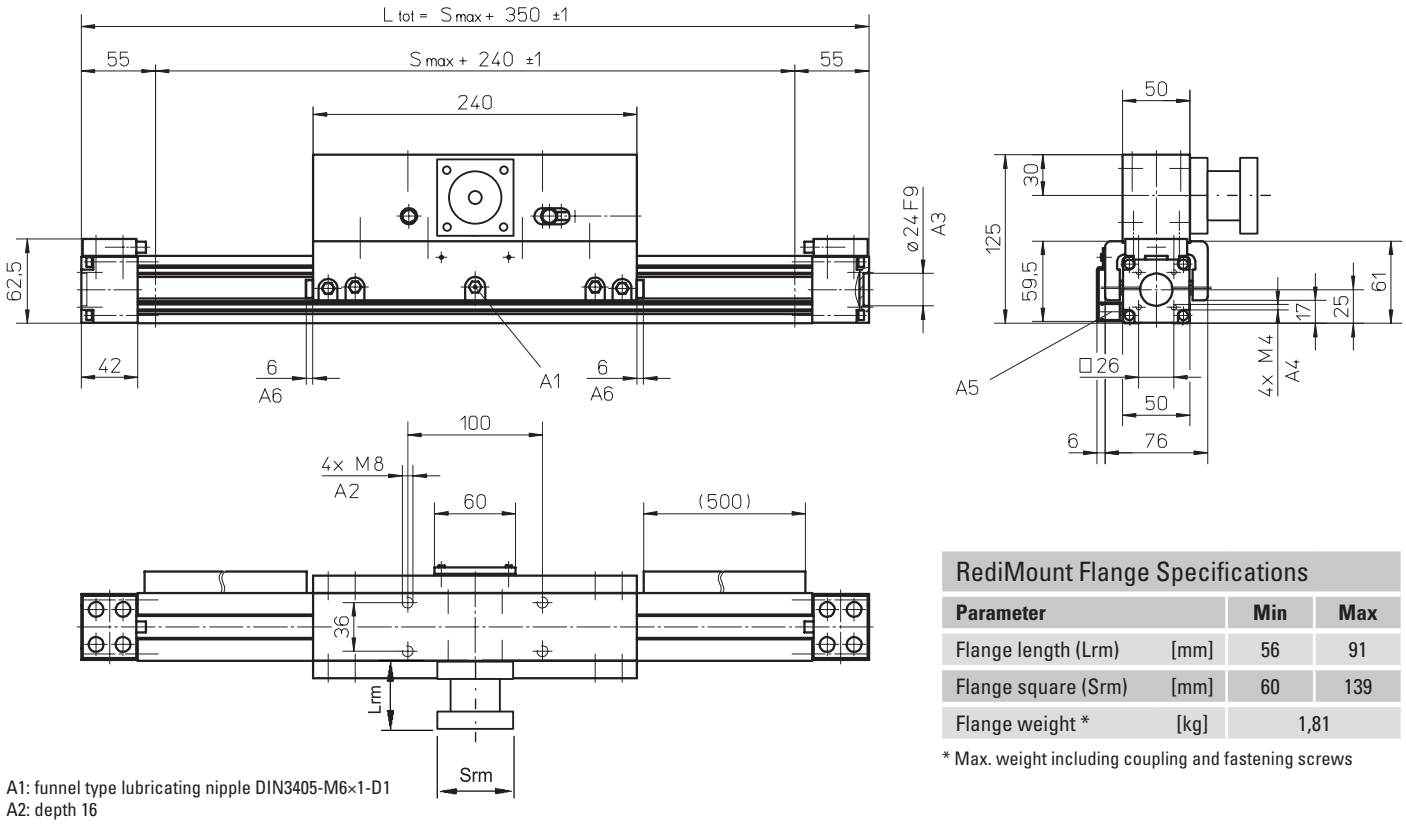


A1: funnel type lubricating nipple DIN3405-M6×1-D1
A2: depth 16
A3: depth 4
A4: depth 8
A5: ENF inductive sensor rail kit (optional - see page 150)
A6: felt pad wipers on both sides of the carriage

### RediMount Flange Specifications

| Parameter | | Min | Max |
|---|---|---|---|
| Flange length (Lrm) | [mm] | 56 | 91 |
| Flange square (Srm) | [mm] | 60 | 139 |
| Flange weight * | [kg] | 1,81 | |

* Max. weight including coupling and fastening screws

## Performance Specifications
for Units with Single Long Carriage (L)

| Parameter | | WHZ50 |
|---|---|---|
| Stroke length (Smax), maximum | [mm] | 1500 |
| Total length (L tot), maximum | [mm] | 2010 |
| Carriage length | [mm] | 400 |
| Dynamic load torque (My), maximum | [Nm] | 130 |
| Dynamic load torque (Mz), maximum | [Nm] | 75 |
| Weight | [kg] | 3,3 |

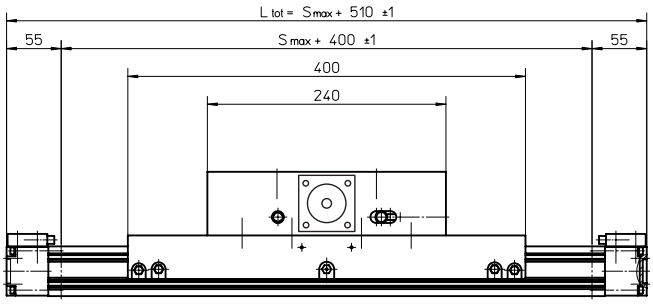


## Performance Specifications
for Units with Double Standard Carriage (Z)

| Parameter | | WHZ50 |
|---|---|---|
| Stroke length (Smax), maximum | [mm] | 1400 |
| Total length (L tot), maximum | [mm] | 2010 |
| Minimum distance between carriages (Lc) | [mm] | 260 |
| Dynamic load (Fy), maximum | [N] | 830 |
| Dynamic load (Fz), maximum | [N] | 1460 |
| Dynamic load torque (My), maximum | [Nm] | Lc[1] × 0,415 |
| Dynamic load torque (Mz), maximum | [Nm] | Lc[1] × 0,73 |
| Force required to move second carriage | [N] | 16 |
| Total length (L tot) | [mm] | Smax + 350 + Lc |

[1] Value in mm

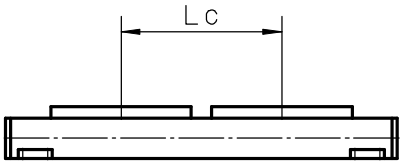

# WHZ80

## Belt Drive, Wheel Guide

» Ordering key - see page 191
» Accessories - see page 117
» Additional data - see page 175

## General Specifications

| Parameter | WHZ80 |
|---|---|
| Profile size (w × h) [mm] | 80 × 80 |
| Type of belt | 32 ATL 5 |
| Carriage sealing system | none |
| Adjustable belt tensioning | the belt can be retensioned by the customer if necessary |
| Lubrication | lubrication of carriage and guide surfaces |
| Included accessories | - |

## Performance Specifications

for Units with Single Standard Carriage (N)[1]

| Parameter | | WHZ80 |
|---|---|---|
| Stroke length (Smax), maximum | [mm] | 3000 |
| Total length (L tot), maximum | [mm] | 3410 |
| Linear speed, maximum | [m/s] | 10,0 |
| Acceleration, maximum | [m/s²] | 40 |
| Repeatability | [± mm] | 0,05 |
| Input speed, maximum | [rpm] | 3000 |
| Operation temperature limits | [°C] | 0 – 80 |
| Dynamic load (Fx), maximum | [N] | 1480 [2] |
| Dynamic load (Fy), maximum | [N] | 882 |
| Dynamic load (Fz), maximum | [N] | 2100 |
| Dynamic load torque (Mx), maximum | [Nm] | 75 |
| Dynamic load torque (My), maximum | [Nm] | 230 |
| Dynamic load torque (Mz), maximum | [Nm] | 100 |
| Drive shaft force (Frd), maximum [3] | [N] | 500 |
| Input/drive shaft torque (Mta), maximum | [Nm] | 50 |
| Pulley diameter | [mm] | 63,66 |
| Stroke per shaft revolution | [mm] | 200 |
| Weight | [kg] | |
| of unit with zero stroke | | 11,20 |
| of every 100 mm of stroke | | 0,91 |
| of each drive station box | | 6,65 |

[1] See next page for deviating values of units with other carriage types.
[2] See diagram Force Fx.
[3] Only relevant for units without RediMount flange.

## Carriage Idle Torque, (M idle) [Nm]

| Input speed [rpm] | Idle torque [Nm] |
|---|---|
| 150 | 2,4 |
| 1500 | 3,5 |
| 3000 | 5,0 |

M idle = the input torque needed to move the carriage with no load on it.

## Force Fx as a Function of the Speed

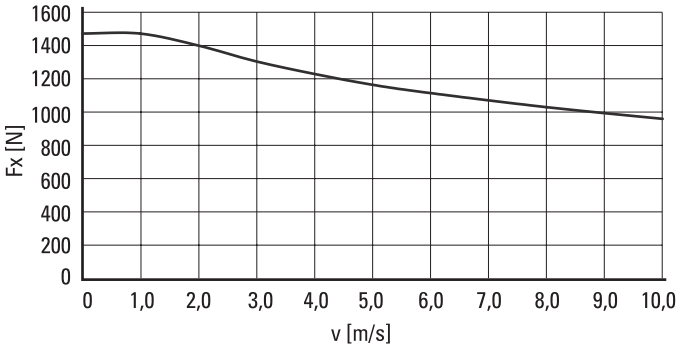


## Definition of Forces

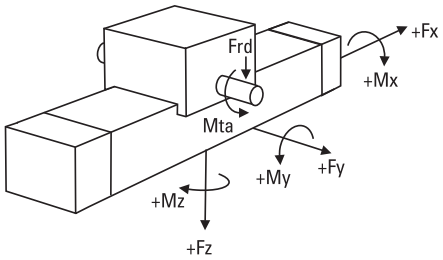

# WHZ80

## Belt Drive, Wheel Guide

| Dimensions | Projection | Online Sizing & Selection! |
|---|---|---|
| METRIC | | www.LinearMotioneering.com |

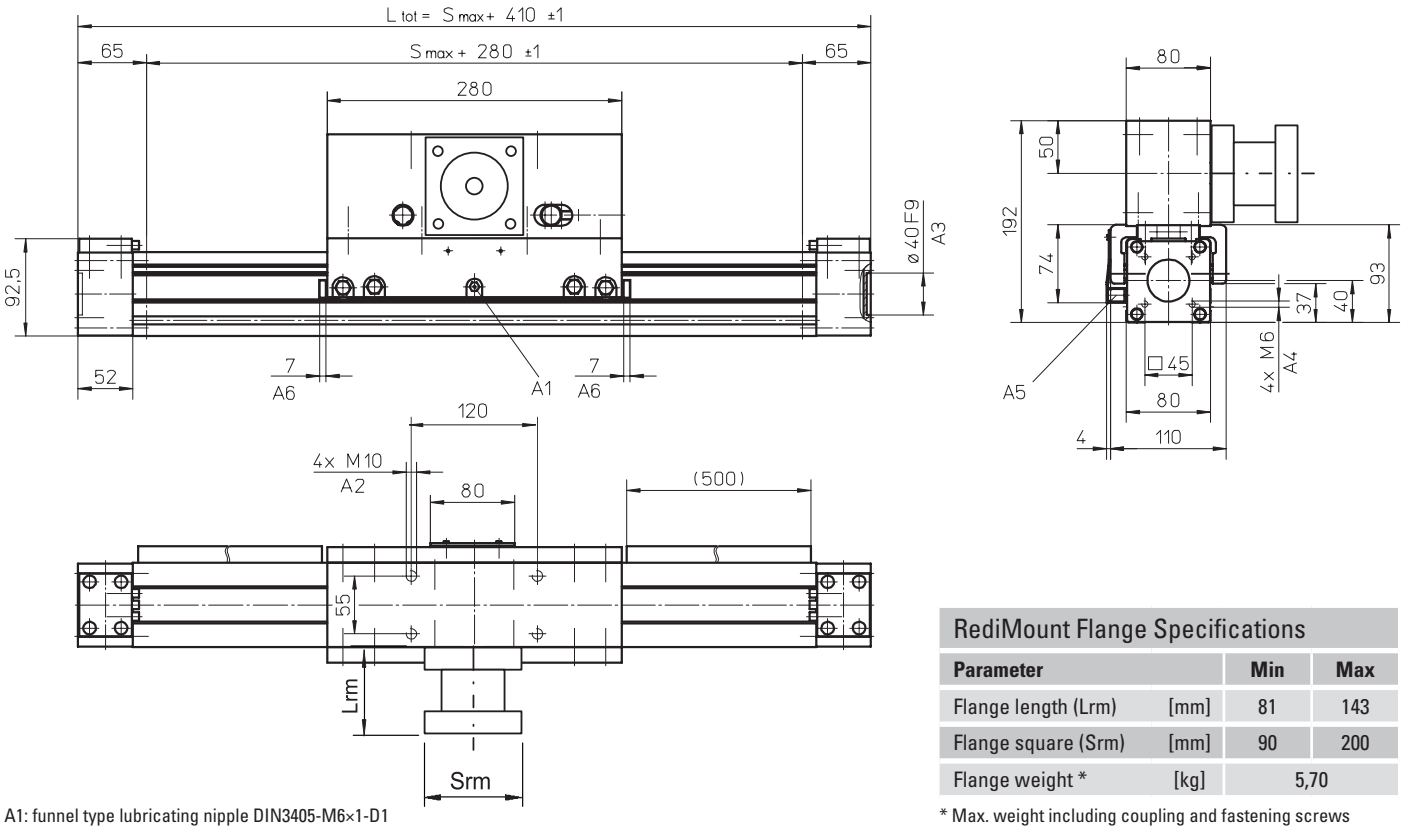


A1: funnel type lubricating nipple DIN3405-M6×1-D1
A2: depth 4
A3: depth 15
A4: ENF inductive sensor rail kit (optional - see page 150)
A5: felt pad wipers on both sides of the carriage

### RediMount Flange Specifications

| Parameter | | Min | Max |
|---|---|---|---|
| Flange length (Lrm) | [mm] | 81 | 143 |
| Flange square (Srm) | [mm] | 90 | 200 |
| Flange weight * | [kg] | 5,70 | |

* Max. weight including coupling and fastening screws

## Performance Specifications
for Units with Single Long Carriage (L)

| Parameter | | WHZ80 |
|---|---|---|
| Stroke length (Smax), maximum | [mm] | 3000 |
| Total length (L tot), maximum | [mm] | 3580 |
| Carriage length | [mm] | 450 |
| Dynamic load torque (My), maximum | [Nm] | 345 |
| Dynamic load torque (Mz), maximum | [Nm] | 150 |
| Weight | [kg] | 7,4 |

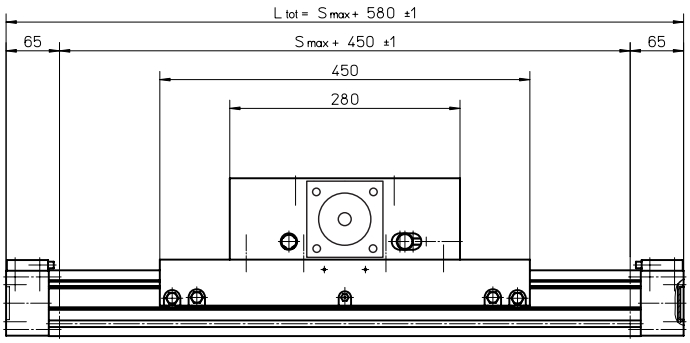


## Performance Specifications
for Units with Double Standard Carriage (Z)

| Parameter | | WHZ80 |
|---|---|---|
| Stroke length (Smax), maximum | [mm] | 2870 |
| Total length (L tot), maximum | [mm] | 3580 |
| Minimum distance between carriages (Lc) | [mm] | 300 |
| Dynamic load (Fy), maximum | [N] | 1764 |
| Dynamic load (Fz), maximum | [N] | 4200 |
| Dynamic load torque (My), maximum | [Nm] | Lc[1] × 0,882 |
| Dynamic load torque (Mz), maximum | [Nm] | Lc[1] × 2,1 |
| Force required to move second carriage | [N] | 20 |
| Total length (L tot) | [mm] | Smax + 410 + Lc |

[1] Value in mm
[2] Second carriage is always a long carriage

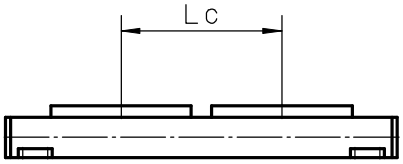

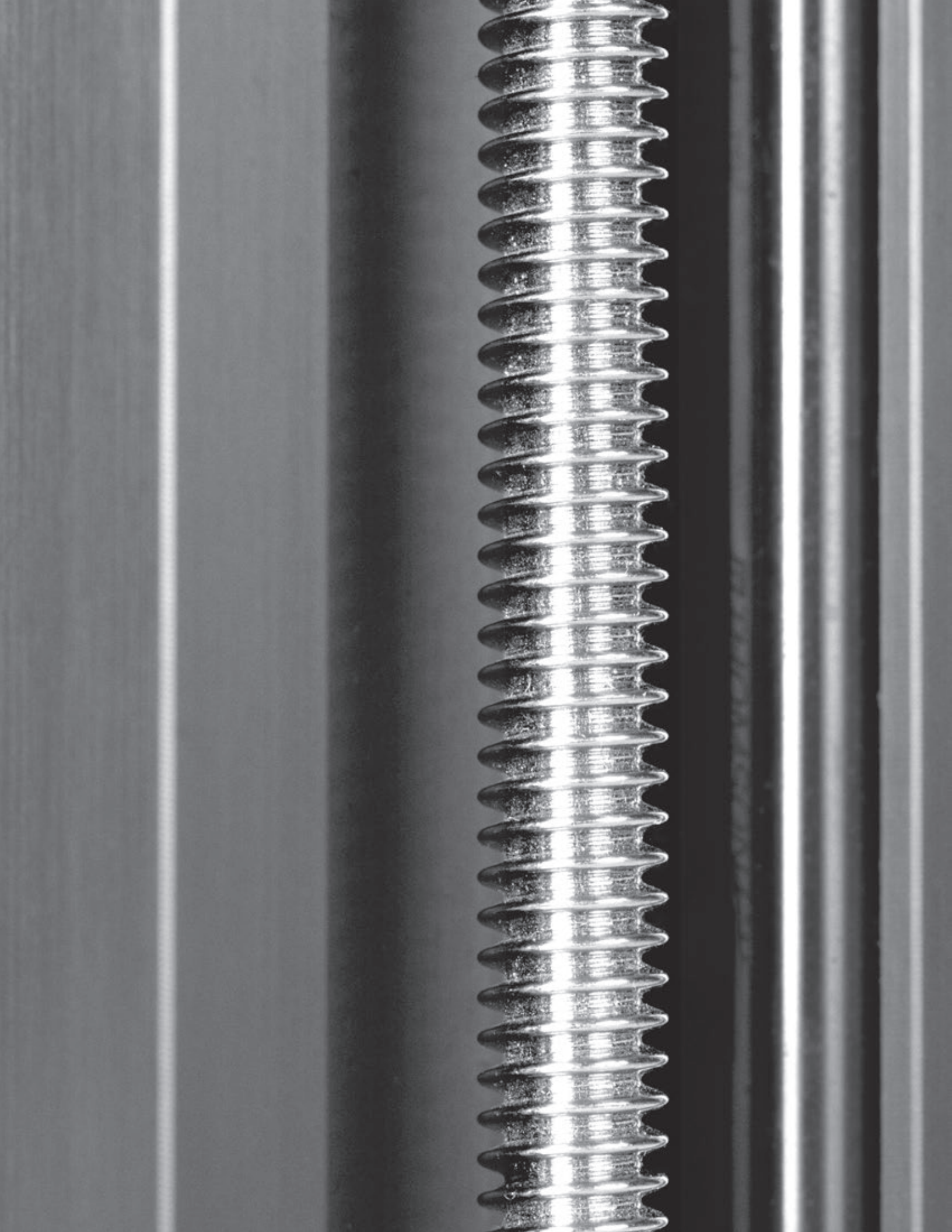

# Accessories

## Accessory Index

# Accessories

## Mounting Kits

### Mounting Clamps Type N1 and N2 (single clamp)[1]

| Unit type | N1 | N2 | A | B | C | D | øE | F | øG | H | Screws | Ms [Nm] |
|---|---|---|---|---|---|---|---|---|---|---|---|---|
| WH40 | 890 885 0001 | – | 54 | 16 | 9,5 | 40 | 10 | 5,7 | 5,5 | 7 | ISO4762-8.8 | 5,4 |
| WH50 | 890 885 0001 | – | 54 | 16 | 9,5 | 40 | 10 | 5,7 | 5,5 | 7 | ISO4762-8.8 | 5,4 |
| WH80 | 890 190 02 | – | 68 | 17,5 | 17 | 50 | 11 | 6,5 | 6,6 | 7 | ISO4762-8.8 | 9 |
| WH120 | 890 192 13 | – | 80 | 25 | 18 | 50 | 15 | 8,5 | 9 | 10 | ISO4762-8.8 | 20 |
| WM40 | 890 885 001 | – | 54 | 16 | 9,5 | 40 | 10 | 5,7 | 5,5 | 7 | ISO4762-8.8 | 5,4 |
| WM60 / WV60 | 890 190 02 | – | 68 | 17,5 | 17 | 50 | 11 | 6,5 | 6,6 | 7 | ISO4762-8.8 | 9 |
| WM80 / WV80 | 890 190 02 | – | 68 | 17,5 | 17 | 50 | 11 | 6,5 | 6,6 | 7 | ISO4762-8.8 | 9 |
| WM60Z / WM80Z | 890 190 02 | – | 68 | 17,5 | 17 | 50 | 11 | 6,5 | 6,6 | 7 | ISO4762-8.8 | 9 |
| WM120 / WV120 | 890 192 13 | – | 80 | 25 | 18 | 50 | 15 | 8,5 | 9 | 10 | ISO4762-8.8 | 20 |
| MLS60 | 890 190 02 | 890 192 26 | 68/120 | 17,5 | 17 | 50 | 11 | 6,5 | 6,6 | 7 | ISO4762-8.8 | 9 |
| MLS80 | 890 192 13 | 890 192 31 | 80/200 | 25 | 18 | 50 | 15 | 8,5 | 9 | 10 | ISO4762-8.8 | 20 |

[1] Screws included in the shipment of above clamps

Ms = tightening torque of screws

N1

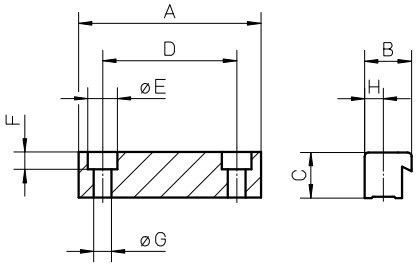


N2

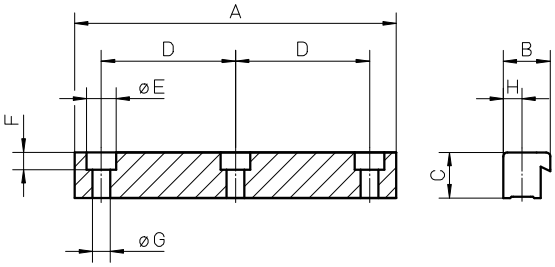


### Mounting Clamps Type M1 and M2 (single clamp)[1]

| Unit type | M1 | M2 | A | B | C | D | øE | F | øG | H | Screws | Ms [Nm] |
|---|---|---|---|---|---|---|---|---|---|---|---|---|
| M50 [1] | D312 248 | – | 25 | 30 | 20 | – | – | – | 6,5 | 14 | ISO4762-8.8 | 9,4 |
| M55 [1] | D313 403 | D313 402 | 25/56 | 25,5 | 10,7 | 41 | 9,5 | 5,3 | 5,5 | 10,2 | ISO4762-8.8 | 5,5 |
| M75 [1] | D312 747 | D312 748 | 30/75 | 28,5 | 15 | 60 | 14 | 8,5 | 8,5 | 11 | ISO4762-8.8 | 23 |
| M100 [1] | D312 339 | D312 334 | 45/92 | 46,5 | 22 | 60 | 17 | 10,5 | 10,5 | 20 | ISO4762-8.8 | 45 |

[1] No screws included in the shipment of above clamps

Ms = tightening torque of screws

M1

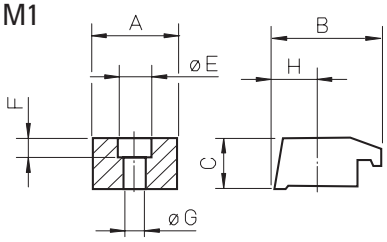


M2

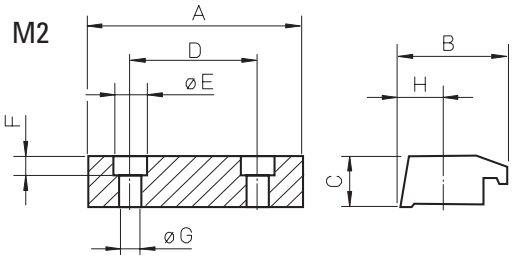

# Accessories

## Mounting Kits

### Mounting Clamps Type M2 with Plate[1]

| Unit type | p/n | A | B | C | D | E | øF | øG | H |
|---|---|---|---|---|---|---|---|---|---|
| M50 | D312 117 | 7 | 20 | 105 | 35 | 30 | 6,5 | 11 | – |
| M55 | D313 474 | 8,5 | 15 | 100 | 44 | 70 | 8,5 | 14 | 44 |
| M75 | D312 718 | 8,5 | 15 | 134 | 44 | 80 | 8,5 | 14 | 44 |
| M100 | D312 317 | 8,5 | 20 | 190 | 44 | 100 | 8,5 | 14 | 44 |

[1] two mounting clamps of version M2 (see page 118) and screws to connect these to the plate are included in shipment

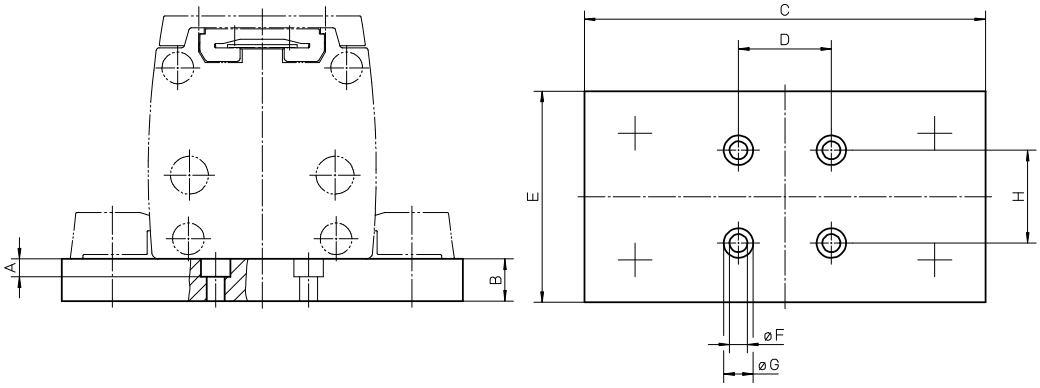

# Accessories

## Mounting Kits

### Mounting Clamps Type N1 for Multi Axis Systems[1]

| Unit type X-axis | Unit type Y-axis | Clamps | A | B | C | D | øE | F | øG | H |
|---|---|---|---|---|---|---|---|---|---|---|
| WM40 / WH40 | WM40 / WH40 | on request | – | – | – | – | – | – | – | – |
| WM60 | WM60 | 890 191 94 | 58 | 17,5 | 17 | 40 | 11 | 6,5 | 6,6 | 7 |

[1] all necessary screws are included in the shipment

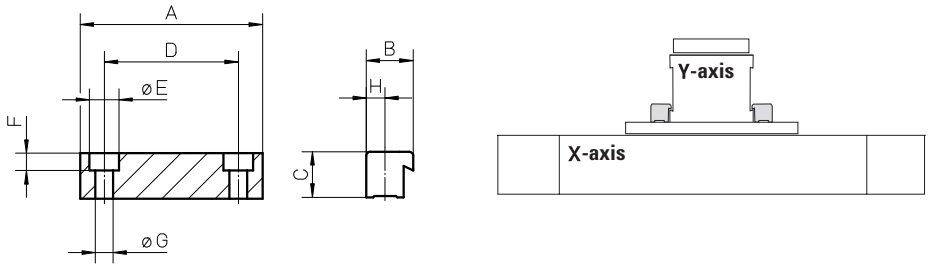


### Mounting Clamps Type M2 for Multi Axis Systems[1]

| Unit type X-axis | Unit type Y-axis | p/n | A | B | C | D | øE | F | øG | H |
|---|---|---|---|---|---|---|---|---|---|---|
| M55 | M55 | D313 424 | 56 | 25,5 | 10,7 | 41 | 9,5 | 5,3 | 5,5 | 10,2 |
| M75 | M75 | D312 719 | 75 | 28,5 | 15 | 60 | 14 | 8,5 | 8,5 | 11 |
| M100 | M100 | D312 304 | 92 | 46,5 | 22 | 60 | 17 | 10,5 | 10,5 | 20 |

### Mounting Clamps Type M2 with Plate for Multi Axis Systems[1]

| Unit type X-axis | Unit type Y-axis | p/n | A | B | C | D | E | øF | øG | H |
|---|---|---|---|---|---|---|---|---|---|---|
| M55 | M75 | D313 470 | 5,5 | 15 | 134 | 76 | 80 | 5,5 | 9,5 | 41 |
| M75 | M55 | D313 060 | 8,5 | 15 | 134 | 106 | 80 | 8,5 | 14 | 60 |
| M75 | M100 | D313 062 | 8,5 | 20 | 190 | 106 | 100 | 8,5 | 14 | 60 |
| M100 | M75 | D313 292 | 10,5 | 20 | 190 | 142 | 100 | 10,5 | 17 | 60 |

[1] all necessary screws are included in the shipment

Clamps

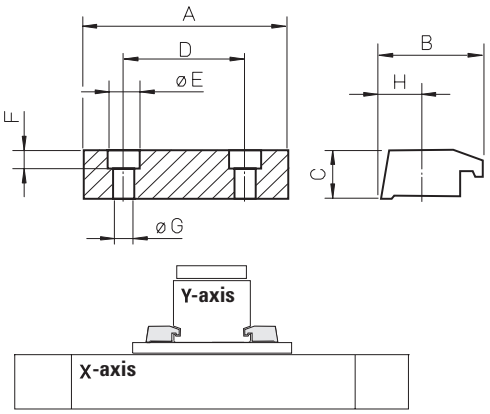


Clamps with Plate

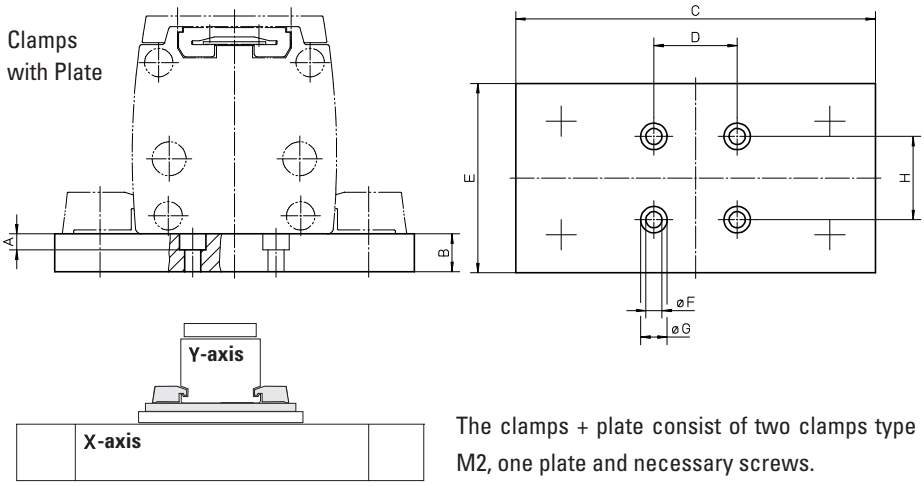


The clamps + plate consist of two clamps type M2, one plate and necessary screws.

# Accessories

## Mounting Kits

### Mounting Plates for Multi Axis Systems

| Unit type X-axis | Unit type Y-axis | p/n | A | B | C | D | E | F | G | H | J | K | L |
|---|---|---|---|---|---|---|---|---|---|---|---|---|---|
| 2HB10 | 2HB10 | 2HXYP10-10 | 70 | 70 | 5,5 | 9 | 6 | 100 | 100 | 35 | 75 | M5 x 0,8 - 6H | 12,7 |
| 2HB20 | 2HB10 | 2HXYP20-10 | 145 | 145 | 10,5 | 16,5 | 11 | 200 | 200 | 35 | 75 | M5 x 0,8 - 6H | 22 |
| 2HB20 | 2HB20 | 2HXYP20-10 | 145 | 145 | 10,5 | 16,5 | 11 | 200 | 200 | 85 | 120 | M8 x 1,25 - 6H | 22 |

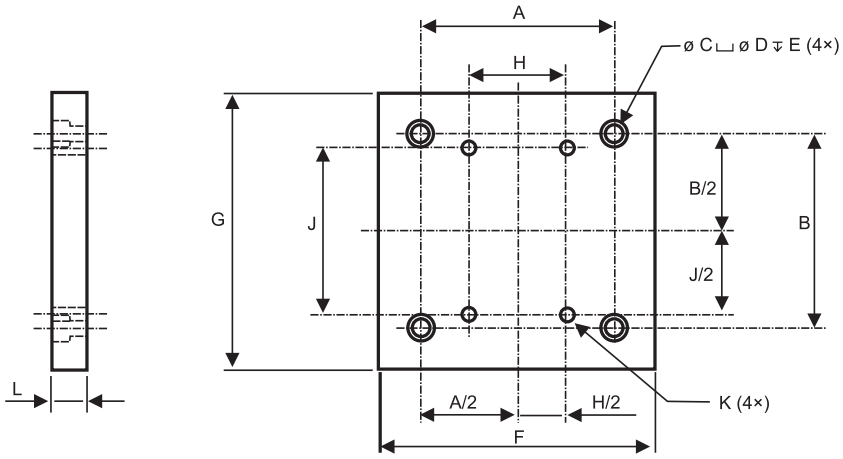


Combinations for other units are available. Contact customer support for details.

### Adapter Plates

| Unit type | I | I I | A | B | C | D | E | øF | G |
|---|---|---|---|---|---|---|---|---|---|
| M55 | D313 422 | D313 423 | 40 | 60 | 20 | 38 | 25,5 | 6,5 | 37 |
| M75 | D312 746 | – | 40 | – | 26 | - | 45 | 6,5 | 51 |
| M75 | – | D312 745 | – | 60 | - | 39 | 45 | 7,5 | 51 |
| M100 | D312 338 | – | 40 | – | 26 | - | 69 | 6,5 | 62 |
| M100 | – | D312 337 | – | 60 | - | 39 | 69 | 7,5 | 62 |

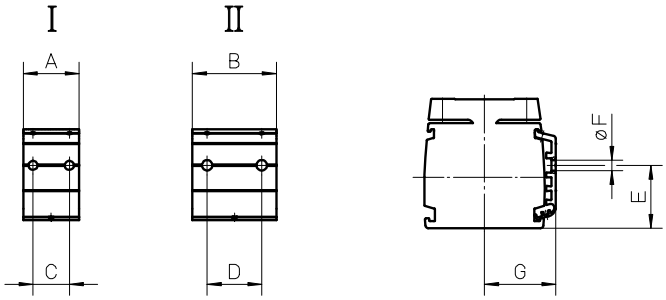


Adapter plates are fitted in the grooves along the profile and can be used to attach sensors, switches, cable ducts etc. to the unit.

# Accessories

## Mounting Kits

### T-slot Bolts

| Unit type | p/n | øD | H |
|---|---|---|---|
| M50 | D312 221 | M5 | 14 |

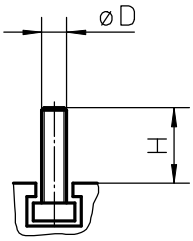


### T-slot Nuts

| Unit type | p/n | A | B | C | D | øE | F |
|---|---|---|---|---|---|---|---|
| MLS60 | 920 303 0037 | 16 | 8 | 4 | 6 | M6 | 16 |
| MLS80 | 920 303 0039 | 19,5 | 10 | 5,5 | 10,5 | M8 | 20 |
| WH120 | 911 044 19 | 15 | 10 | 6 | 12 | M8 | 15 |
| WM120 | 911 044 19 | 15 | 10 | 6 | 12 | M8 | 15 |
| 2RB12, 2HB10, 2HB20 | TNUT-01-M3 | 7 | 4 | 1,75 | 3 | M3 | 9 |
| 2RB16, 2HB10 | TNUT-02-M4 | 9,5 | 5,5 | 2,25 | 4 | M4 | 12 |
| 2RB12 | TNUT-03-M4 | 12 | 7 | 2,5 | 5 | M4 | 15 |
| 2RB16, 2HB20 | TNUT-04-M4 | 16,5 | 7,9 | 4,8 | 6 | M4 | 16 |
| 2RB16, 2HB20 | TNUT-04-M5 | 16,5 | 7,9 | 4,8 | 6 | M5 | 16 |
| 2RB16, 2HB20 | TNUT-04-M6 | 16,5 | 7,9 | 4,8 | 6 | M6 | 16 |

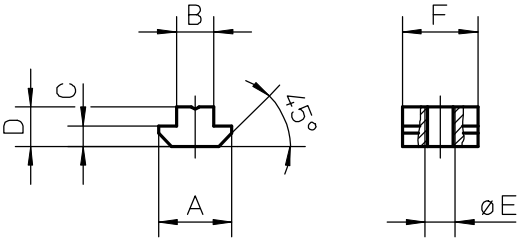

# Accessories

## Cover and Protection Kits

### FA Felt Pad Wiper

| Unit type | Number of carriages on the unit | p/n | X |
|---|---|---|---|
| WH50 | 1 | 890 885 0064 | 6 |
| WH50 | 2 | 2 × 890 885 0064 | 6 |
| WH80 | 1 | 890 890 0069 | 7 |
| WH80 | 2 | 2 × 890 890 0069 | 7 |
| WH120 | 1 | 890 895 0058 | 8 |
| WH120 | 2 | 2 × 890 895 0058 | 8 |
| WHZ50 | 1 | 890 885 0064 | 6 |
| WHZ50 | 2 | 2 × 890 885 0064 | 6 |
| WHZ80 | 1 | 890 890 0069 | 7 |
| WHZ80 | 2 | 2 × 890 890 0069 | 7 |

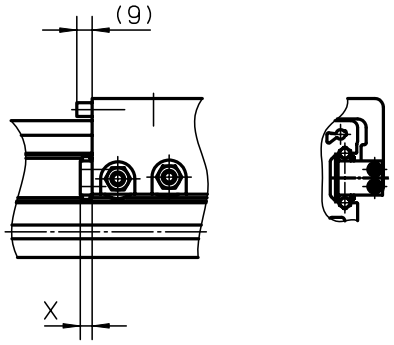


The felt pad wipers remove dust and dirt from the guides and are located on the carriage(s). They may increase the driving torque slightly but do not reduce the stroke of the unit. The felt pad wipers comes mounted from factory as standard on all WH and WHZ units but can also be ordered here as a spare part.

### Shaft Protection Cover

| Unit type | p/n | A | B |
|---|---|---|---|
| M50 | D312 201 | 126 | 35 |
| M55 | D312 201 | 151 | 35 |
| M75 | D700 178 | 198 | 45 |
| M100 | D700 178 | 202 | 45 |

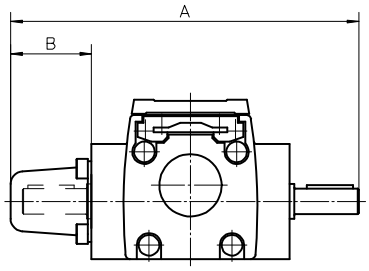


The shaft protection cover is used to cover shafts which are not being used. The covers are fitted by the customer.

# Accessories

## Cover and Protection Kits

### Protective Bellows type 2D

| Unit type | p/n | H | H1 | B |
|---|---|---|---|---|
| 2DB08 | BEL-2DB-08 | 48 | 34 | 130 |
| 2DB12 | BEL-2D-12 | 61 | 36,5 | 152,5 |
| 2DB12 | BEL-2D-16 | 73 | 43 | 190,5 |

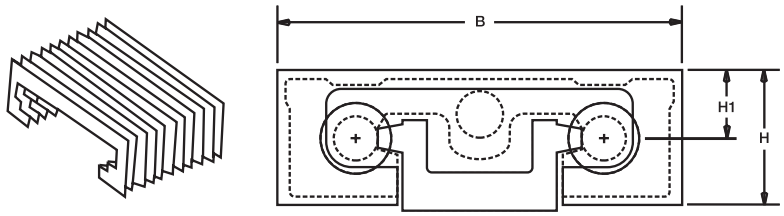


Bellows protect the unit from dirt and dust. Note that the bellows option reduces the available stroke of the unit by 28%. Bellows can be ordered and mounted at the factory - see ordering key. Bellows can also be ordered separately and fitted by the customer. In that case, order two pieces of bellows where the length of each bellows piece = stroke length of the unit × 0.86.

### Protective Bellows type 2H

| Unit type | p/n | B | B2 | H | H1 | H2 | H4 |
|---|---|---|---|---|---|---|---|
| 2HB10 | BEL-2H-10 | 103 | 81 | 26 | 11 | 10 | 0 |
| 2HB20 | BEL-2H-20 | 199 | 167 | 48 | 30 | 15 | 5 |

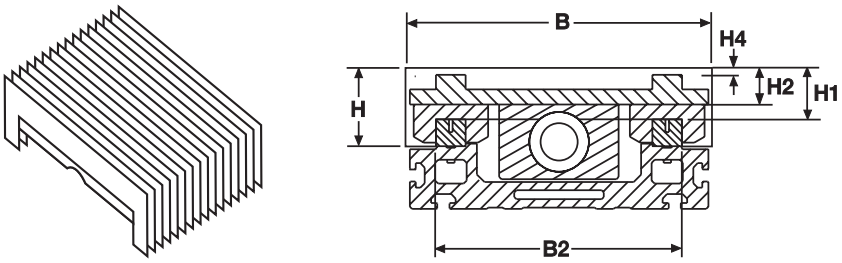


Bellows protect the unit from dirt and dust. Note that the bellows option reduces the available stroke of the unit by 28%. Bellows can be ordered and mounted at the factory - see ordering key. Bellows can also be ordered separately and fitted by the customer. In that case, order two pieces of bellows where the length of each bellows piece = stroke length of the unit × 0.86.

### Protective Bellows type 2R

| Unit type | p/n | B | B2 | H | H1 | H2 | H3 | H4 |
|---|---|---|---|---|---|---|---|---|
| 2RB12 | BEL-2R-12 | 128 | 75 | 48 | 37 | 29 | 15 | 12 |
| 2RB16 | BEL-2R-16 | 158 | 95 | 52 | 43 | 30 | 15 | 10 |

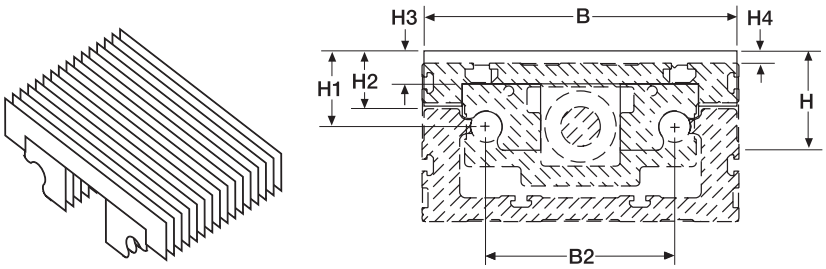


Bellows protect the unit from dirt and dust. Note that the bellows option reduces the available stroke of the unit by 28%. Bellows can be ordered and mounted at the factory - see ordering key. Bellows can also be ordered separately and fitted by the customer. In that case, order two pieces of bellows where the length of each bellows piece = stroke length of the unit × 0.86.

# Accessories

## Cover and Protection Kits

### Protective Shrouds

| Unit type | |
|---|---|
| 2HB10 | see ordering key of the unit for order or www.LinearMotioneering.com |
| 2HB20 | see ordering key of the unit for order or www.LinearMotioneering.com |

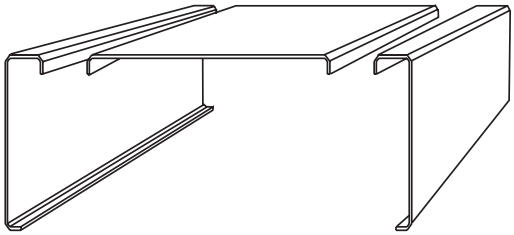

The protective shrouds are made of metal and protect the drive mechanism of the unit from dust and dirt but leave the guides unprotected. Shrouds do not reduce the stroke of the unit but they will add 4 mm to the width of the unit. Shrouds are ordered mounted from factory and are stated in the ordering key of the unit.

# Accessories

## Cover and Protection Kits

### Environment Protection Option Type S1 and S2, compatibility table

| Unit type | Drive type | Guide type | S1 | S2 | Ordering |
|---|---|---|---|---|---|
| M55 | ball screw | slide | • | | see ordering key of the unit for order |
| M55 | belt drive | slide | • | • | see ordering key of the unit for order |
| | | ball | • | | see ordering key of the unit for order |
| M75 | ball screw | slide | • | | see ordering key of the unit for order |
| M75 | belt drive | slide | • | • | see ordering key of the unit for order |
| | | ball | • | | see ordering key of the unit for order |
| M100 | ball screw | slide | • | | see ordering key of the unit for order |
| M100 | belt drive | slide | • | • | see ordering key of the unit for order |
| | | ball | • | | see ordering key of the unit for order |
| WM60 / WM80 / WM120 | ball screw | ball | • | | see ordering key of the unit for order |
| WV60 / WV80 / WV120 | ball screw | no guide | • | | see ordering key of the unit for order |
| WH50 / WH80 / WH120 | belt drive | wheel | • | • | see ordering key of the unit for order |
| WHZ50 / WHZ80 | belt drive | wheel | • | | see ordering key of the unit for order |

The S1 and S2 environment protection options are available for some of the units as per table above. All performance data and the life expectancy are the same as for standard units except for WH and WHZ units (contact customer service for more information). S1 can be ordered for both ball screw and belt driven units with ball, slide or wheel guides while S2 only is possible for belt driven units with slide or wheel guides. Never use chemical agents and/or cleaning detergents before contacting your local Thomson customer service for advice.

S1 - Wash down protection
Typical places where S1 is used are in slaughter houses, dairy plants, food plants or in any other light wash down application.

S2 - Enhanced wash down protection
Typical places where S2 is used are in moderately wet areas such as in paper mills, galvanizing equipment, food industries or in any other harsh environment application where enhanced wash down capabilities are required.

# Accessories

## Cover and Protection Kits

### Environment Protection Options Type S1 and S2, technical specification

| Item | S1 | S2 |
|---|---|---|
| External screws, bolts and nuts | stainless material class A2 or better | stainless material class A4 or better |
| Internal screws, bolts and nuts | standard material | stainless material class A2 or better |
| Drive shaft, ball screw driven units | standard material | - |
| Drive shaft, belt driven units | stainless material SS2333 or better | stainless material SS2343 or better |
| Tension wheel shaft | standard material | stainless material SS2333 or better |
| Bearings type | standard bearings | 2RS |
| Bearing sealings, belt driven units | radial sealings | radial sealings |
| Surface treatment of machined extruded aluminum parts | none | anodizing |
| Surface treatment of machined casted aluminum parts | none | anodizing |
| Cam rollers and idler shafting (WH and WHZ units) | standard material | stainless material |
| Belt retainer (WH units) | none | stainless material |

# Accessories

## Gears and Transmission Kits

### TBS40 Worm Gears, dimensions

| Gear | A | B | C | D | E | F | øG | H | øI | J | K |
|---|---|---|---|---|---|---|---|---|---|---|---|
| TBS40 | 54 | 40 | 46 | 10 | 100 | 125 | 14j6 | 45 | 65 | M8 (4×) | 25 |

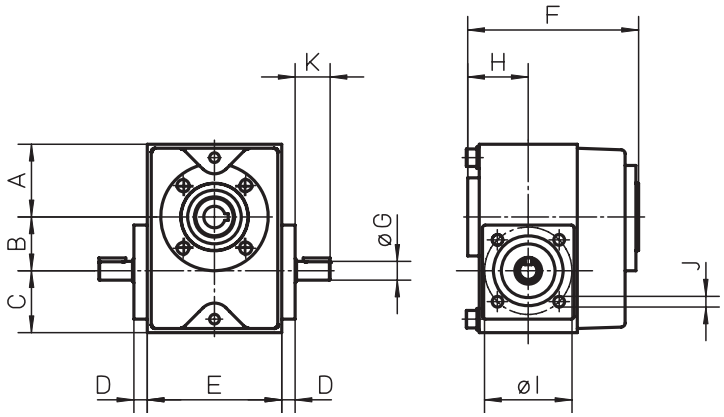


The worm gear is installed directly to the unit and requires no intermediate coupling between the two.

### TBS40 Worm Gears, compatibility table

| Unit | TBS40 | IEC71B14 | IEC80B14 | A | L |
|---|---|---|---|---|---|
| M75 | • | • | | 32 | 58 |
| M75 | • | | • | 32 | 68 |
| M100 | • | • | | 32 | 58 |
| M100 | • | | • | 32 | 68 |

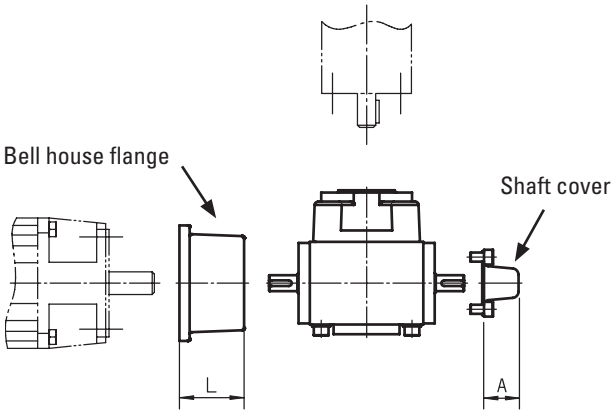


To be able to install the gear to the motor a bell house flange must be used between the gear and the motor. The bell house flange, which includes a matching coupling, is ordered separately. A shaft cover can be ordered to cover the second primary shaft on the gear in case it is not being used.

# Accessories

## Gears and Transmission Kits

### TBS40 Worm Gears, ordering key

| | 1 | 2 | 3 |
|---|---|---|---|
| Example | TBS40 | -3 | -216 |

| 1. Type and size of worm gear | 2. Gear ratio | 3. Fixed code |
|---|---|---|
| TBS40 = TBS40 worm gear | -3 = 3:1<br>-5,5 = 5,5:1<br>-7,5 = 7,5:1<br>-10 = 10:1<br>-15 = 15:1<br>-20 = 20:1<br>-24 = 24:1<br>-30 = 30:1<br>-40 = 40:1<br>-48 = 48:1<br>-60 = 60:1 | -216 |

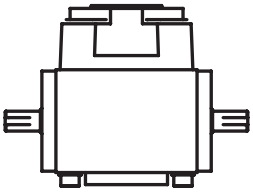

### Bell house flanges for TBS40 Worm Gears, part numbers

| Motor size | p/n |
|---|---|
| IEC71B14 | D701 011 |
| IEC80B14 | D701 015 |

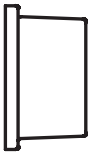

### Shaft Cover for TBS40 Worm Gears, part numbers

| Gear type | p/n |
|---|---|
| TBS40 | D701 020 |

# Accessories

## Gears and Transmission Kits

### RT Belt Gears, dimensions

| Gear | A | B | C | D |
|---|---|---|---|---|
| RT40 | 110 | 30 | 176 | 68 |
| RT60 | 175 | 74 | 345 | 170 |
| RT80 | 175 | 74 | 345 | 170 |

RT40

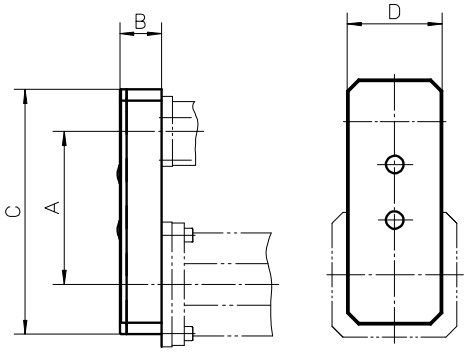


RT60/80

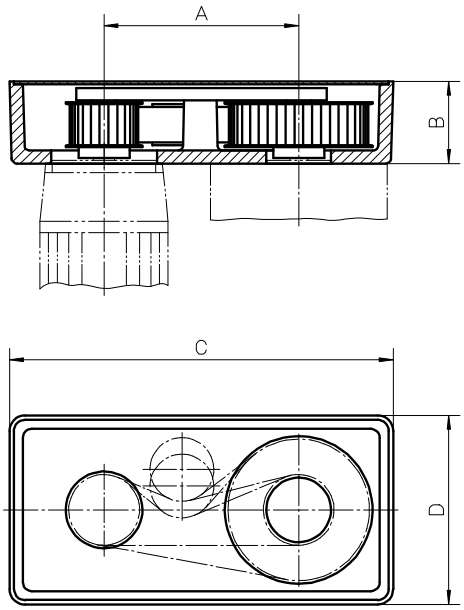


### RT Belt Gears, data

| Gear | i | nmax [rpm] | Mmax [Nm] | M idle [Nm] | η | J [kgm²] | Weight [kg} |
|---|---|---|---|---|---|---|---|
| RT40 | 1:1 | 3000 | 1,75 | 0,3 | 0,80 | 0,000025 | 0,62 |
| RT60 | 1:1 | 3000 | 15 | 0,7 | 0,85 | 0,000438 | 5,6 |
| RT60 | 2:1 | 3000 | 15 | 0,7 | 0,85 | 0,001011 | 7,1 |
| RT80 | 1:1 | 3000 | 30 | 0,7 | 0,85 | 0,000465 | 5,5 |
| RT80 | 2:1 | 3000 | 30 | 0,7 | 0,85 | 0,001038 | 7 |

i = gear ratio
nmax = max. input speed
Mmax = max. input torque
M idle = idle torque
η = efficiency factor
J = inertia

# Accessories

## Gears and Transmission Kits

### RT Belt Gears, compatibility table

| Gear | WH40 / WM40 | WM60 / WV60 / MLSM60D | WH80 / WM80 / WV80 / WM120 / WV120 / MLSM60D / MLSM80D |
|---|---|---|---|
| RT40 | • | | |
| RT60 | | • | |
| RT80 | | | • |

### RT Belt Gears, ordering key

| | 1 | 2 | 3 | 4 | 5 |
|---|---|---|---|---|---|
| Example | RT80 | -2 | -• • • | -P-N | -05 |

**1. Type and size of belt gear**
RT40 = RT belt gear size 40
RT60 = RT belt gear size 60
RT80 = RT belt gear size 80

**2. Gear ratio**
-1 = 1:1
-2 = 2:1

**3. Motor code**
- xxy = alphanumeric motor code (e.g. -AK5). There are several motors that fit each gear and the list of suitable motors is continuously being updated. Please contact customer support for help to see which motors are currently are on the list or if your preferred motor can be added to the list.

**4. Type of mounting**
-P-M = gear supplied mounted to the unit
-P-N = gear supplied unmounted

**5. Compatible unit type**
-01 = WH40
-02 = WH50
-03 = WH80
-04 = WH120
-05 = WM40
-06 = WM60
-07 = WM80
-08 = WM120
-09 = WV60
-10 = WV80
-11 = WV120
-12 = WHZ50
-13 = WHZ80
-16 = MLSH60Z
-18 = MLSM80Z
-19 = MLSM60D
-20 = MLSM80D

RT belt gears can only be used on units without a RediMount flange.

# Accessories

## Gears and Transmission Kits

### BGM Belt Gears, dimensions

| Gear | A | B | C | D | øE | F | G | H | I | J |
|---|---|---|---|---|---|---|---|---|---|---|
| BGM09 | 118,7 | 52 | 255 | 140 | 20 H9 | 95 | 115 | 60 | – | – |
| BGM41 | 155,2 | 70 | 305 | 165 | 25 H9 | 122 | 147 | 70 | – | – |
| BGM81 | 200 | 73 | 399 | 224 | 30 H9 | 134 | 159 | 90 | 90H14 | 170 |

BGM09/41/81 - WITHOUT CLEVIS OPTION

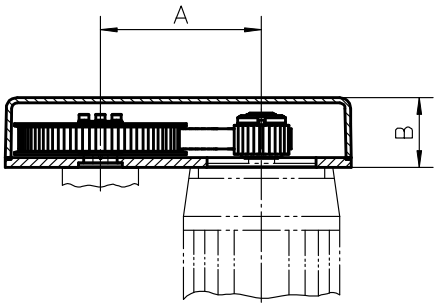


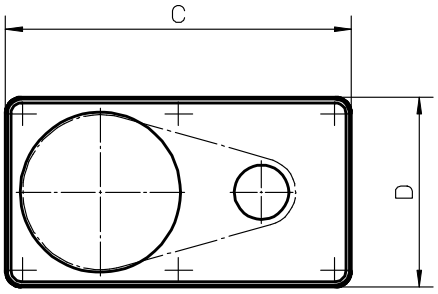


BGM belt gears can only be used on units without a RediMount flange. The belt gear comes in parts and is assembled to the unit and motor by the customer.

BGM09/41/81 - WITH CLEVIS OPTION TYPE S

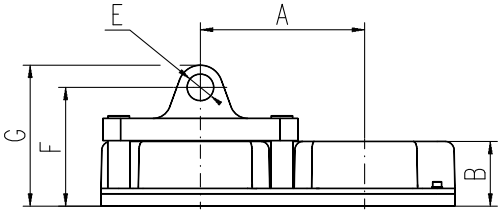


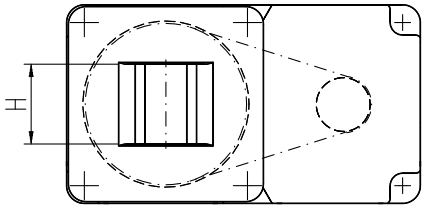


BGM81 - WITH CLEVIS OPTION TYPE R

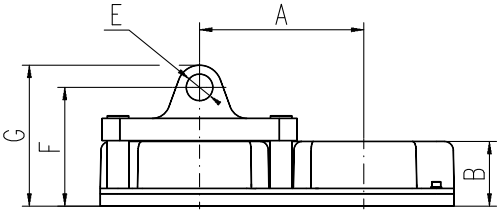


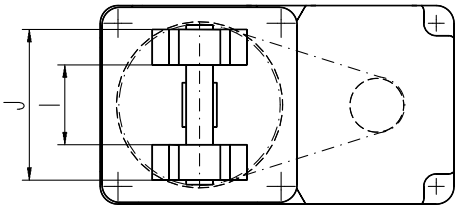

# Accessories

## Gears and Transmission Kits

### BGM Belt Gears, data

| Gear | i | nmax [rpm] | Mmax [Nm] | η | J [kgm²] | Weight [kg} |
|---|---|---|---|---|---|---|
| BGM09 | 1,04:1 | 4000 | 4,1 | 0,85 | 0,000102 | 2 |
| BGM09 | 1,85:1 | 4000 | 4,1 | 0,85 | 0,000112 | 2,1 |
| BGM09 | 2,85:1 | 4000 | 4,1 | 0,85 | 0,000213 | 2,5 |
| BGM41 | 1:1 | 4000 | 22,0 | 0,85 | 0,000438 | 3,4 |
| BGM41 | 2:1 | 4000 | 15,8 | 0,85 | 0,000342 | 3,7 |
| BGM41 | 3:1 | 4000 | 16,7 | 0,85 | 0,000583 | 4,6 |
| BGM81 | 1:1 | 4000 | 29,0 | 0,85 | 0,000836 | 12,1 |
| BGM81 | 2,25:1 | 4000 | 32,3 | 0,85 | 0,001051 | 12,9 |
| BGM81 | 3,13:1 | 4000 | 30,3 | 0,85 | 0,001439 | 14 |

i = gear ratio
nmax = max. input speed
Mmax = max. input torque
η = efficiency factor
J = inertia

### BGM Belt Gears, compatibility table

| Gear | WM/V/Z60 | WM/V80 | WM/V120 | MLSM80D | M50 | M55 | M75 | M100 |
|---|---|---|---|---|---|---|---|---|
| BGM09 | • | | | | • | • | • | |
| BGM41 | • | • | | | | | • | • |
| BGM81 | | | • | • | | | | |

### BGM Belt Gears, ordering keys

See next page for ordering keys.

# Accessories

## Gears and Transmission Kits

### BGM 09 Belt Gears, ordering key

| | 1 | 2 | 3 | 4 | 5 | 6 | 7 | 8 |
|---|---|---|---|---|---|---|---|---|
| Example | BGM09 | -2 | -CC | 063 | P | 050 | X | +XX |

**1. Type and size of belt gear**
BGM09 = BGM belt gear size 09

**2. Gear ratio**
-1 = 1,04:1
-2 = 1,85:1
-3 = 2,85:1

**3. Type of couplings**
-CC = conical couplings

**4. Motor size[1]**
063 = IEC 63 B14
071 = IEC 71 B14
S80 = servo motor size 80
AK4 = servo motor type AKM 4

**5. Type of mounting**
P = standard

**6. Compatible unit type**
W06 = WM60, WV60
050 = M50
060 = M55
070 = M75

**7. Clevis option**
X = no clevis option
S = clevis option type S

**8. Protection**
+XX = standard
+S1 = wash down protection

[1]This is only a selection of all motors that fit this gear. Please contact customer support to see if your preferred motor fits the gear.

### BGM 41 Belt Gears, ordering key

| | 1 | 2 | 3 | 4 | 5 | 6 | 7 | 8 |
|---|---|---|---|---|---|---|---|---|
| Example | BGM41 | -1 | -CC | 071 | P | 070 | X | +S1 |

**1. Type and size of belt gear**
BGM41 = BGM belt gear size 41

**2. Gear ratio**
-1 = 1:1
-2 = 2:1
-3 = 3:1

**3. Type of couplings**
-CC = conical couplings

**4. Motor size[1]**
071 = IEC 71 B14
080 = IEC 80 B14
S80 = servo motor size 80
S95 = servo motor size 95
AK5 = servo motor type AKM 5

**5. Type of mounting**
P = standard

**6. Compatible unit type**
W06 = WM60, WV60
W08 = WM80, WV80
070 = M75
10B = M100 (MF/G10B)
10K = M100 (MF/G10K/C/D)

**7. Clevis option**
X = no clevis option
S = clevis option type S

**8. Protection**
+XX = standard
+S1 = wash down protection

[1]This is only a selection of all motors that fit this gear. Please contact customer support to see if your preferred motor fits the gear.

# Accessories

## Gears and Transmission Kits

### BGM 81 Belt Gears, ordering key

| | 1 | 2 | 3 | 4 | 5 | 6 | 7 | 8 |
|---|---|---|---|---|---|---|---|---|
| Example | BGM81 | -1 | -CC | 090 | P | M8D | X | +XX |

**1. Type and size of belt gear**
BGM81 = BGM belt gear size 81

**2. Gear ratio**
-1 = 1:1
-2 = 2,25:1
-3 = 3,13:1

**3. Type of couplings**
-CC = conical couplings

**4. Motor size[1]**
090 = IEC 90 B14
100 = IEC 100/121 B14
A20 = servo motor size A200
AK6 = servo motor type AKM 6

**5. Type of mounting**
P = standard

**6. Compatible unit type**
W12 = WM120, WV120
M8D = MLSM80D

**7. Clevis option**
X = no clevis option
S = clevis option type S
R = clevis option type R

**8. Protection**
+XX = standard
+S1 = wash down protection

[1]This is only a selection of all motors that fit this gear. Please contact customer support to see if your preferred motor fits the gear.

# Accessories

## Gears and Transmission Kits

### Micron DT, DTR Planetary Gears, compatibility and dimensions

| Unit | Gear | i | □A | B | C | □D | E | Weight [kg] | Backlash [arc min] | Efficiency [%] |
|---|---|---|---|---|---|---|---|---|---|---|
| WH50 | DT60-SS | 3:1 - 10:1 | 89,7 | 60 | – | – | – | 1 | 8 | 90 |
| | DT60-DS | 15:1 - 100:1 | 106,9 | 60 | – | – | – | 1,2 | 9 | 85 |
| | DTR60-SS | 5:1 - 50:1 | – | – | 110,2 | 104,1 | 60 | 2,5 | 9 | 90 |
| | DTR60-DS | 60:1 - 500:1 | – | – | 127,3 | 104,1 | 60 | 2,7 | 9 | 85 |
| WH80 | DT90-SS | 3:1 - 10:1 | 110,9 | 90 | – | – | – | 3 | 9 | 90 |
| | DT90-DS | 15:1 - 100:1 | 133,5 | 90 | – | – | – | 3,7 | 9 | 85 |
| | DTR90-SS | 5:1 - 50:1 | – | – | 145,4 | 138,2 | 90 | 4,8 | 9 | 90 |
| | DTR90-DS | 60:1 - 500:1 | – | – | 168,0 | 138,2 | 90 | 5,5 | 9 | 85 |
| WH120 | DT115-SS | 3:1 - 10:1 | 136,4 | 110 | – | – | – | 12,7 | 8 | 90 |
| | DT115-DS | 15:1 - 100:1 | 167,4 | 110 | – | – | – | 16,2 | 9 | 85 |
| | DTR115-SS | 5:1 - 50:1 | – | – | 185,7 | 173,5 | 115 | 11 | 8 | 90 |
| | DTR115-DS | 60:1 - 500:1 | – | – | 216,7 | 173,5 | 115 | 12 | 9 | 85 |
| WM60Z | DT60-SS | 3:1 - 10:1 | 89,7 | 60 | – | – | – | 1 | 8 | 90 |
| | DT60-DS | 15:1 - 100:1 | 106,9 | 60 | – | – | – | 1,2 | 9 | 85 |
| | DTR60-SS | 5:1 - 50:1 | – | – | 110,2 | 104,1 | 60 | 2,5 | 9 | 90 |
| | DTR60-DS | 60:1 - 500:1 | – | – | 127,3 | 104,1 | 60 | 2,7 | 9 | 85 |
| WM80Z | DT90-SS | 3:1 - 10:1 | 110,9 | 90 | – | – | – | 3 | 9 | 90 |
| | DT90-DS | 15:1 - 100:1 | 133,5 | 90 | – | – | – | 3,7 | 9 | 85 |
| | DTR90-SS | 5:1 - 50:1 | – | – | 145,4 | 138,2 | 90 | 4,8 | 9 | 90 |
| | DTR90-DS | 60:1 - 500:1 | – | – | 168,0 | 138,2 | 90 | 5,5 | 9 | 85 |

Micron gears can only be used on units without a RediMount flange. Micron DT and DTR planetary gears comes mounted on the unit from factory.

i = gear ratio

DT

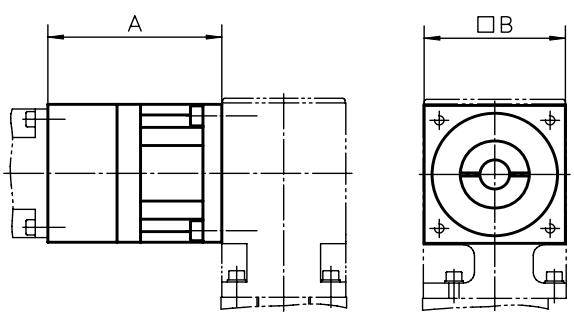


DTR

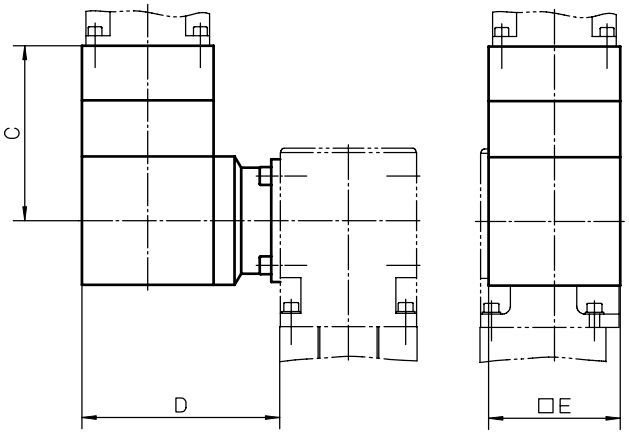


Left side

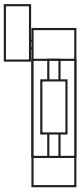

Right side

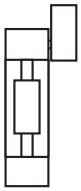

Position 1

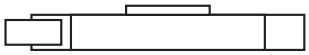

Position 2

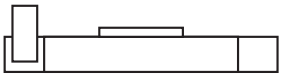

Position 3

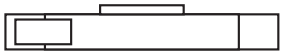

Position 4

# Accessories

## Gears and Transmission Kits

## Micron DT, DTR Planetary Gears, how to order

When ordering a DT or DTR planetary gear you need to state the size and type of gear, which side of the unit the gear shall be installed, the gear ratio and which motor that you wish to use. For DTR you also must state the preferred mounting position of the gear. With this information we can check if your choice of motor is possible or not and give you the correct ordering code for the gear.

## Micron DT, ordering data

**1. Size of planetary gear**
DT60
DT90
DT115

**2. Type of gear**
-SS
-DS

**3. Mounting side of the unit**
Left
Right

**4. Gear ratio**
3:1 (only for -SS models)
5:1 (only for -SS models)
10:1 (only for -SS models)
15:1 (only for -DS models)
25:1 (only for -DS models)
30:1 (only for -DS models)
50:1 (only for -DS models)
100:1 (only for -DS models)

**5. Motor**
Specify your choice of motor.

## Micron DTR, ordering data

**1. Type and size of planetary gear**
DTR60
DTR90
DTR115

**2. Type of gear**
-SS
-DS

**3. Mounting position of the gear**
Position 1
Position 2
Position 3
Position 4

**4. Mounting side of the unit**
Left
Right

**5. Gear ratio**
5:1 (only for -SS models)
6:1 (only for -SS models)
9:1 (only for -SS models)
10:1 (only for -SS models)
12:1 (only for -SS models)
15:1 (only for -SS models)
20:1 (only for -SS models)
25:1 (only for -SS models)
30:1 (only for -SS models)
40:1 (only for -SS models)
50:1 (only for -SS models)
60:1 (only for -DS models)
75:1 (only for -DS models)
90:1 (only for -DS models)
100:1 (only for -DS models)
120:1 (only for -DS models)
125:1 (only for -DS models)
150:1 (only for -DS models)
200:1 (only for -DS models)
250:1 (only for -DS models)
300:1 (only for -DS models)
400:1 (only for -DS models)
500:1 (only for -DS models)

**6. Motor**
Specify your choice of motor.

# Accessories

## Gears and Transmission Kits

### VWZ Intermediate Shafts, dimensions

| Shaft | øA | B | C | D | øE | F min. | G |
|---|---|---|---|---|---|---|---|
| VWZ-30 | 32 | 15 | 1,5 | 34 | 30 | 99 | M4 |
| VWZ-40 | 42 | 17 | 1,5 | 46 | 40 | 133 | M5 |
| VWZ-60 | 56 | 30 | 2 | 63 | 60 | 177 | M6 |
| VWZ-60V | 67 | 35 | 2 | 73 | 60 | 205 | M8 |
| VWZ-80 | 82 | 40 | 2 | 84 | 80 | 249 | M10 |
| VWZ-100 | 102 | 50 | 2 | 97 | 100 | 283 | M12 |

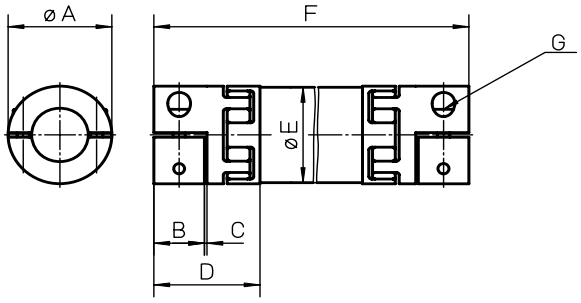


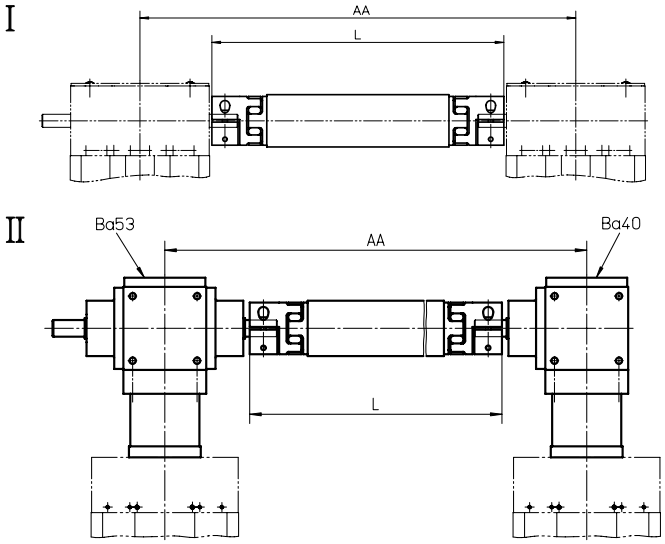


The VWZ intermediate shafts can be installed in two ways. Either directly to belt driven units (I) or to screw driven units using KRG bevel gears (II) of type VL50, VL100 or VL200. However, belt driven units with a RediMount flange can not be combined with VWZ shafts while screw driven units can, but in which case the unit must be ordered with the RediMount ID code that fits the bevel gear in question. The intermediate shaft includes tube and couplings.

### Critical Speed of Shaft

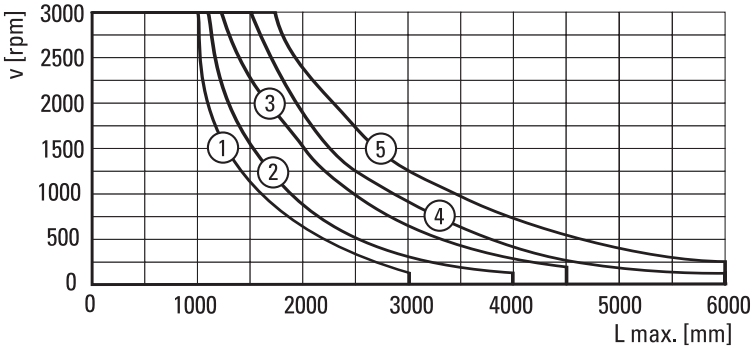


1: VWZ-30
2: VWZ-40
3: VWZ-60 and VWZ-60V
4: VWZ-80
5: VWZ-100

### VWZ Intermediate Shafts, data

| Shaft | Mmax [Nm] | Gs [kg/m] | Gc [kg] | Js [kgm²/m] | Jc [kgm²] | Ms [Nm] |
|---|---|---|---|---|---|---|
| VWZ-30 | 4,8 | 0,58 | 0,14 | 0,00011 | 0,00001 | 4 |
| VWZ-40 | 6,4 | 0,76 | 0,36 | 0,00020 | 0,00008 | 8 |
| VWZ-60 | 22,7 | 0,97 | 0,94 | 0,00080 | 0,00024 | 15 |
| VWZ-60V | 60,6 | 0,97 | 1,42 | 0,00080 | 0,00046 | 35 |
| VWZ-80 | 122,7 | 2,00 | 2,98 | 0,00300 | 0,00240 | 70 |
| VWZ-100 | 169,7 | 2,47 | 4,62 | 0,00580 | 0,00600 | 120 |

Mmax = max. shaft torque  Gc = weight of coupling  Jc = inertia of coupling
Gs = weight of shaft  Js = inertia of shaft  Ms = tightening torque

# Accessories

## Gears and Transmission Kits

### VWZ Intermediate Shafts, compatibility table

| Unit | I | I I | VWZ-30 | VWZ-40 | VWZ-60 | VWZ-60V | VWZ-80 | VWZ-100 | AA [mm] |
|---|---|---|---|---|---|---|---|---|---|
| WH40 | • | | | • | | | | | AA = L + 56 |
| WH50 / WHZ50 | • | | | | • | | | | AA = L + 54 |
| WM60Z | • | | | | • | | | | AA = L + 64 |
| WH80 / WHZ80 | • | | | | | • | | | AA = L + 84 |
| WH120 | • | | | | | | | • | AA = L + 124 |
| WM80Z | • | | | | | • | | | AA = L + 84 |
| MLSH60Z | • | | | | | • | | | AA = L + 164 |
| WM40 | | VL50 | • | | | | | | AA = L + 170 |
| WM60 / WV60 | | VL100 | | | • | | | | AA = L + 184 |
| WM80 / WV80 / MLSM60D | | VL100 | | | | • | | | AA = L + 176 |
| MLSM80Z | • | | | | | | • | | AA = L + 244 |
| WM120 / WV120 / MLSM60D / MLSM80D | | VL200 | | | | | • | | AA = L + 244 |

AA = C/C distance between units
L = total length of shaft and coupling assembly

### VWZ Intermediate Shafts, ordering key

| | 1 | 2 | 3 |
|---|---|---|---|
| Example | VWZ-060 | -02 | -0700 |

**1. Intermediate shaft size**
VWZ-030 = VWZ-30
VWZ-040 = VWZ-40
VWZ-060 = VWZ-60
VWZ-06V = VWZ-60V
VWZ-080 = VWZ-80
VWZ-100 = VWZ-100

**2. Type of unit and type of mounting**
-01 = WH40 for type I mounting
-02 = WH50 / WHZ50 for type I mounting
-03 = WM80Z for type I mounting
-04 = WH80 / WHZ80 for type I mounting
-05 = WH120 for type I mounting
-06 = WM60Z for type I mounting
-07 = MLSH60Z for type I mounting
-08 = WM40 for type II mounting on VL5O gears
-10 = WM60 / WV60 for type II mounting on VL100 gears
-11 = WM80 / WV80 / MLSM60D for type II mounting on VL100 gears
-12 = MLSM80Z for type I mounting
-13 = WM120 / WV120 / MLSM60D / MLSM80D for type II mounting on VL200 gears

**3. C/C distance between units (AA)**
- xxxx = distance in mm

# Accessories

## Gears and Transmission Kits

## DSP Intermediate Shafts, data

| Shaft | Weight of shaft [kg] | Max. speed [rpm] | Shaft diameter [mm] |
|---|---|---|---|
| DSP-05B | 0,3 + 1,3 × Lm | 1500 | 20 |
| DSP-06B | 0,3 + 1,3 × Lm | 1500 | 20 |
| DSP-07B | 0,6 + 2,6 × Lm | 1500 | 30 |
| DSP-10B | 0,6 + 2,6 × Lm | 1500 | 30 |
| DSB--ZB | 0,6 + 2,6 × Lm | 1500 | 30 |
| DSP-TBS | 0,6 + 2,6 × Lm | 1500 | 30 |

Lm = C/C distance between units in cm

The DSP intermediate shaft can be installed directly between two belt driven units or between two screw driven units using a TBS worm gear. The DSP shaft can not be used on units with a Redi-Mount flange. Couplings and tube are included in the shipment. Support bearings may need to be installed if the critical speed of the shaft is exceeded. See diagram. Support bearings can be ordered from your local bearing supplier.

DSP-05B/06B/07B/10B/-ZB

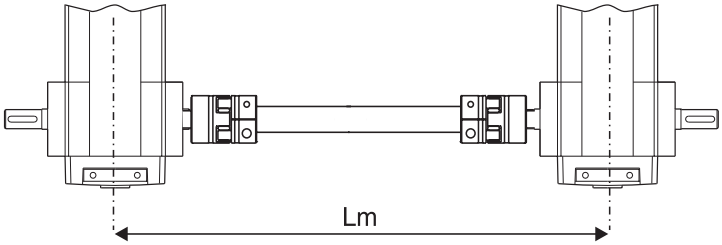


DSP-TBS

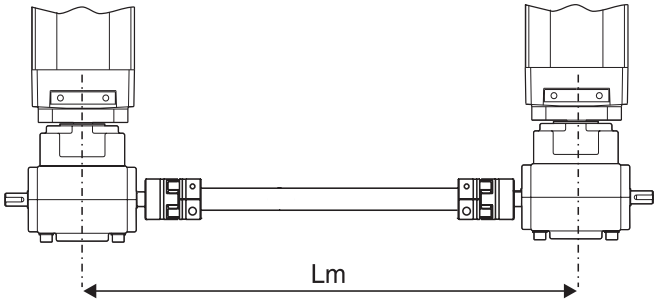


## Critical Speed of Shaft

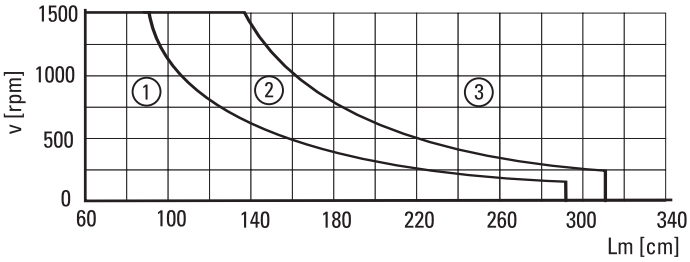


1: No support bearing required
2: Support bearing required for DSP-05B and DSP-06B
3: Support bearing always required

# Accessories

## Gears and Transmission Kits

### DSP Intermediate Shafts, compatibility table

| Unit | Drive type | DSP-05B | DSP-06B | DSP-07B | DSP-10B | DSP--ZB | DSP-TBS |
|---|---|---|---|---|---|---|---|
| M50 | belt | • | | | | | |
| M55 | belt | | • | | | | |
| M75 | belt | | | • | | | |
| M100 | belt | | | | • | | |
| M55 | screw | | | | | | • |
| M75 | screw | | | | | | • |
| M100 | screw | | | | | | • |

### DSP Intermediate Shafts, ordering key

| | 1 | 2 |
|---|---|---|
| Example | DSP-06B | -305 |

**1. Intermediate shaft size and type**
DSP-05B = for belt driven M50 units
DSP-06B = for belt driven M55 units
DSP-07B = for belt driven M75 units
DSP-10B = for belt driven M100 units
DSP-TBS = for screw driven M55, M75 or M100 units with TBS worm gear

**2. C/C distance between units in cm (Lm)**
- xxx = length in cm

# Accessories

## Gears and Transmission Kits

### Spring Set Brake

| Unit type | p/n | Nema size | Static torque [lbf-in] | Supply voltage [VDC] | Dimensions [in] | | | | | | | Brake hub p/n[1] | Brake adaptor p/n |
|---|---|---|---|---|---|---|---|---|---|---|---|---|---|
| | | | | | F | G | H | J | K | L | HEX | | |
| 2DB08 | TEB23A | 23 | NEMA 23 | 24 | 2.25 | 1.10 | 0.11 | 2.25 | 0.22 | 2.625 | 5/8 | HEXHUB23A | MB08-23 |
| 2DB12 | TEB23B | 23 | NEMA 23 | 24 | 2.25 | 1.10 | 0.11 | 2.25 | 0.22 | 2.625 | 5/8 | HEXHUB23B | none required |
| 2HB10, 2RB12 | TEB23D | 23 | NEMA 23 | 24 | 2.25 | 1.10 | 0.11 | 2.25 | 0.22 | 2.625 | 5/8 | HEXHUB23D | none required |
| 2RB16 | TEB23E | 23 | NEMA 23 | 24 | 2.25 | 1.10 | 0.11 | 2.25 | 0.22 | 2.625 | 5/8 | HEXHUB23E | none required |
| 2DB16 | TEB34A | 34 | NEMA 34 | 24 | 2.25 | 1.10 | 0.11 | 3.25 | 0.22 | 3.875 | 5/8 | HEXHUB34A | none required |
| 2HB20 | TEB34C | 34 | NEMA 34 | 24 | 2.25 | 1.31 | 0.11 | 3.25 | 0.22 | 3.875 | 7/8 | HEXHUB34A | none required |

[1] Hub included in spring set brake

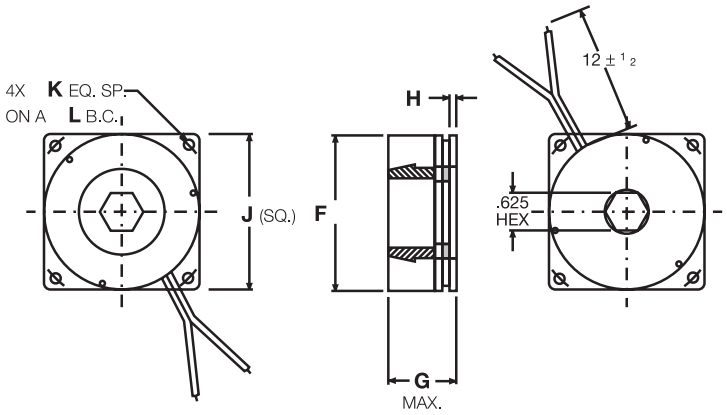


Mounts to support end of 2HB, 2RB, and 2DB units. The brake engages upon loss of power and provides resistance to back drive rotation of ball screws due to gravitational forces when power is interrupted to the brake unit. They are pre-burnished for maximum torque capacity and come with standard NEMA 23, 34 or 42 mounting patterns for easy field retrofit. Compact size minimizes change to the overall system envelope. The 2HB, 2RB, and 2DB ordering keys can be configured with the brake as part of the assembly. See ordering keys or www.LinearMotioneering.com for details. The part numbers listed here are for the brake parts as separate items.

### Spring Set Brake Hubs

| Brake type | p/n | Unit type | Set screw torque [in-lb][1] | Dimensions [in (mm)] | | | | |
|---|---|---|---|---|---|---|---|---|
| | | | | A | B | C | D | E |
| TEB23A | HEXHUB23A | 2DB08 | 36 | 1.53 | 3/16 | 0.15 | #10/32 | 5/8 |
| TEB23B | HEXHUB23B | 2DB12 | 36 | 1.31 | 1/4 | 0.26 | #10/32 | 5/8 |
| TEB23D | HEXHUB23D | 2HB10, 2RB12 | 36 | (20) | (8) | (5) | M4 | 5/8 |
| TEB23E | HEXHUB23E | 2RB16 | 36 | (20) | (20) | (5) | M4 | 5/8 |
| TEB34A | HEXHUB34A | 2DB16 | 36 | 1.67 | 3/8 | 0.44 | #10/32 | 5/8 |
| TEB34C | HEXHUB34A | 2HB20 | 36 | (32) | 14 | (6) | M5 | 7/8 |

[1] It is suggested a serviceable thread locking compound be used.

HEXHUB •••

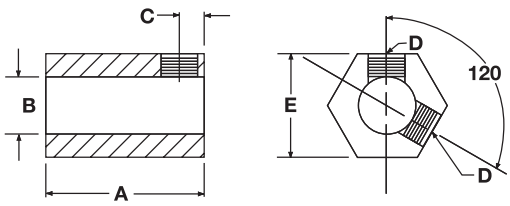


SPLHUB42A

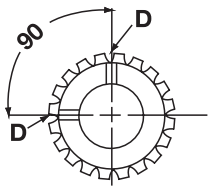

# Accessories

## Electrical Feedback Devices

### Limit Switch Brackets[1]

| Unit type | I | For limit switch type | I I | For limit switch type |
|---|---|---|---|---|
| M50 | D393 035 | ZCM-D21 | – | – |
| M55 | D313 427 | ZCM-D21 | D313 428 | ZCM-D21 |
| M75 | D312 860 | XCK-M115 | D312 861 | XCK-M115 |
| M100 | D312 330 | XCK-M115 | D312 331 | XCK-M115 |

[1] No limit switches included in the shipment.

I

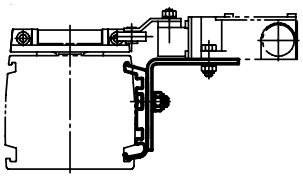

II

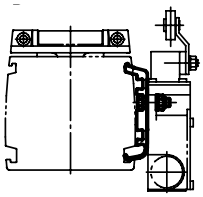

### Limit Switches

| Switch type | p/n | Protection degree | Contacts | Cable |
|---|---|---|---|---|
| XCK-M115 | D535 107 | IP67 | NO + NC | – |
| ZCM-D21 | D535 102 | IP67 | NO + NC | 1 meter |

# Accessories

## Electrical Feedback Devices

### Sensor Brackets for Cylindrical Sensors[1]

| Unit type | I | For sensor diameter | I I | For sensor diameter |
|---|---|---|---|---|
| M55 | D313 429 | M12 | D313 430 | M12 |
| M75 | D312 862 | M18 | D312 863 | M18 |
| M100 | D312 332 | M18 | D312 333 | M18 |

[1] no sensors included in the shipment

I

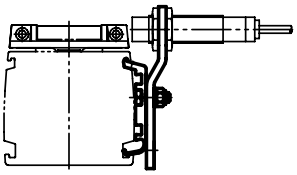

II

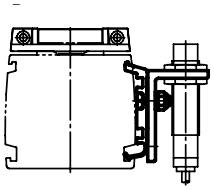

### Cylindrical Inductive Sensors

| Sensor type | p/n | Diameter | Input voltage | Max. current | Protection degree | Contacts | Cable |
|---|---|---|---|---|---|---|---|
| PNP | D535 085 | M12 | 12 - 48 Vdc | 0,2 A | IP67 | NO | connector |
| PNP | D535 089 | M18 | 12 - 48 Vdc | 0,2 A | IP67 | NO | connector |

### Cylindrical Inductive Sensor Connectors

| For sensor diameter | p/n |
|---|---|
| M12 | D535 092 |
| M18 | D535 091 |

# Accessories

## Electrical Feedback Devices

### Sensor Packages

| Unit type | Package type | p/n | Output type | Output operation | Frequency [1] | Supply voltage [VDC] | Cable length [m] | Sdetract [mm] |
|---|---|---|---|---|---|---|---|---|
| 2HB10 | One home sensor | LSP2HBM10-N-1 | NPN | NO | 1 × V | 12 - 24 | 5 | - |
| | | LSP2HBM10-P-1 | PNP | NO | 1 × V | 12 - 24 | 5 | - |
| | Two limit switch sensors | LSP2HBM10-N-2 | NPN | NC | 2 × S | 12 - 24 | 5 | 30 |
| | | LSP2HBM10-P-2 | PNP | NC | 2 × S | 12 - 24 | 5 | 30 |
| | One home and two limit switch sensors | LSP2HBM10-N-3 | NPN | 1 × NC, 2 × NO | 1 × V, 2 ×S | 12 - 24 | 5 | 30 |
| | | LSP2HBM10-P-3 | PNP | 1 × NC, 2 × NO | 1 × V, 2 ×S | 12 - 24 | 5 | 30 |
| 2HB20 | One home sensor | LSP2HBM20-N-1 | NPN | NO | 1 × V | 12 - 24 | 5 | - |
| | | LSP2HBM20-P-1 | PNP | NO | 1 × V | 12 - 24 | 5 | - |
| | Two limit switch sensors | LSP2HBM20-N-2 | NPN | NC | 2 × S | 12 - 24 | 5 | 30 |
| | | LSP2HBM20-P-2 | PNP | NC | 2 × S | 12 - 24 | 5 | 30 |
| | One home and two limit switch sensors | LSP2HBM20-N-3 | NPN | 1 × NC, 2 × NO | 1 × V, 2 ×S | 12 - 24 | 5 | 30 |
| | | LSP2HBM20-P-3 | PNP | 1 × NC, 2 × NO | 1 × V, 2 ×S | 12 - 24 | 5 | 30 |
| 2RB12 | One home sensor | LSP2RM12-N-1 | NPN | NO | 1 × V | 12 - 24 | 5 | - |
| | | LSP2RM12-P-1 | PNP | NO | 1 × V | 12 - 24 | 5 | - |
| | Two limit switch sensors | LSP2RM12-N-2 | NPN | NC | 2 × S | 12 - 24 | 5 | 35 |
| | | LSP2RM12-P-2 | PNP | NC | 2 × S | 12 - 24 | 5 | 35 |
| | Home and limit switch sensors | LSP2RM12-N-3 | NPN | 1 × NC, 2 × NO | 1 × V, 2 ×S | 12 - 24 | 5 | 35 |
| | | LSP2RM12-P-3 | PNP | 1 × NC, 2 × NO | 1 × V, 2 ×S | 12 - 24 | 5 | 35 |
| 2RB16 | One home sensor | LSP2RM16-N-1 | NPN | NO | 1 × V | 12 - 24 | 5 | - |
| | | LSP2RM16-P-1 | PNP | NO | 1 × V | 12 - 24 | 5 | - |
| | Two limit switch sensors | LSP2RM16-N-2 | NPN | NC | 2 × S | 12 - 24 | 5 | 35 |
| | | LSP2RM16-P-2 | PNP | NC | 2 × S | 12 - 24 | 5 | 35 |
| | One home and two limit switch sensors | LSP2RM16-N-3 | NPN | 1 × NC, 2 × NO | 1 × V, 2 ×S | 12 - 24 | 5 | 35 |
| | | LSP2RM16-P-3 | PNP | 1 × NC, 2 × NO | 1 × V, 2 ×S | 12 - 24 | 5 | 35 |

[1] V = varied frequency. S = standard frequency.

LIMIT SWITCH POSITION 2HBE

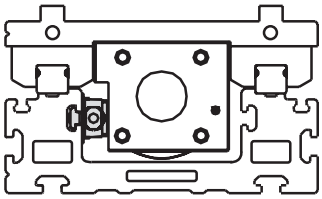

LIMIT SWITCH POSITION 2RB

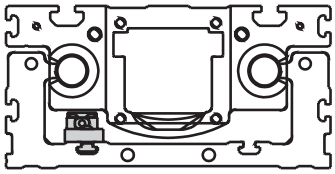

Each 2HB and 2RB can be equipped with sensors inside of the profile where they are protected from mechanical damage. The systems are provided with access holes on each side of each end plate for passage of the sensor package cable. Using limit switch sensors will reduce the effective stroke. The standard position will approximately reduce the stroke by the distance listed in the Sdetract column. The 2HB, 2RB, 2HE and 2RE ordering keys can be configured with the limit switches and/or a home sensor as part of the assembly. See ordering keys or www.LinearMotioneering.com for details. The part numbers listed above are for the limit switches and/or home sensors as separate items.

# Accessories

## Electrical Feedback Devices

### EN2 Inductive Sensors, part numbers

| Sensor type | Cable length [m] | p/n |
|---|---|---|
| Normally closed | 2 | 671 545 0305 |
| Normally open | 2 | 671 545 0304 |
| Normally closed | 10 | 671 545 0307 |
| Normally open | 10 | 671 545 0306 |

To be able to mount the EN2 inductive sensors on a unit the ENT14x16 sensor rail is required (see page 178) except for units WM120 and WV120 where they can be fitted directly to the profile of the unit.

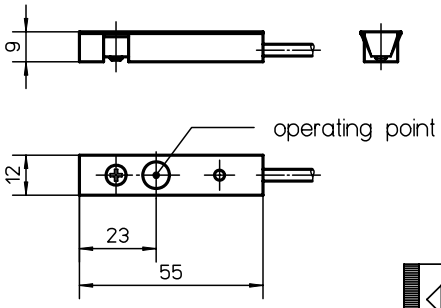


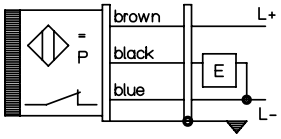


### EN2 Inductive Sensors, data

| Parameter | | EN2 |
|---|---|---|
| Supply voltage | [Vdc] | 10 – 30 |
| Max. load current | [A] | 0,2 |
| Operating distance | [mm) | 2 |
| LED indicator for switch | | yes |
| Protection class | | IP67 |
| Cable type | | screened |
| Weight<br>with cable L = 2 m<br>with cable L= 10 m | [kg] | <br>0,04<br>0,19 |

### Magnetic Sensors, data

| Parameter | | |
|---|---|---|
| Max. power | [W] | 10 |
| Max. voltage | [Vdc] | 100 |
| Max. current | [A] | 0,5 |
| LED indicator for switch | | no |
| Protection class | | IP67 |
| Cable length | [m] | 3 |
| Cable cross section | [mm²] | 2 × 0,15 |
| Operating temperature limits | [°C] | -25 – 65 |
| Weight | [kg] | 0,050 |

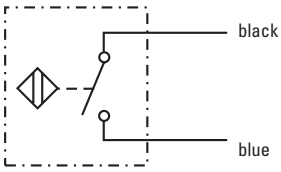


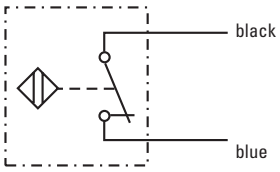


### Magnetic Sensors, part numbers

| Sensor type | suitable units | p/n |
|---|---|---|
| Normally closed | M50 | D535 071 |
| Normally open | M50 | D535 070 |

On M50 the magnetic sensors are mounted directly in the sensor slot of the profiles of the units and require no mounting bracket. The sensor is fixed in position by two M3 size locking screws (A1). The cable (A2) is molded into the sensor.

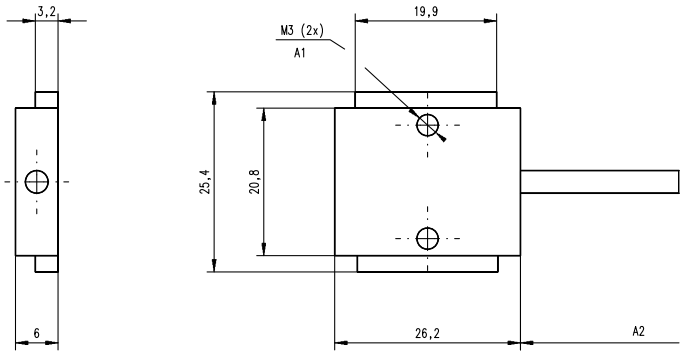

# Accessories

## Electrical Feedback Devices

### IG602 Encoders, data

| Parameter | | IG602 |
|---|---|---|
| Supply voltage | [Vdc] | |
| Type 1 | | 5 ±10% |
| Type 2 | | 10 – 30 |
| Output type | | |
| Type 1 | | line driver |
| Type 2 | | push-pull |
| Pulses per revolution | [ppr] | |
| Type 1 | | 100 – 2500 |
| Type 2 | | 100 – 600 |
| Length (L) | [mm] | |
| Type 1 | | 51,5 |
| Type 2 | | 56,0 |
| Weight | [kg] | |
| Type 1 | | 0,36 |
| Type 2 | | 0,36 |

The IG602 encoders come with mounting screws but no coupling or connector. To be able to mount the encoder to the unit, the unit must have a shaft for encoders. See the ordering keys of the units. The encoders can also be ordered mounted to the unit from factory. See ADG encoder option kit on page 170.

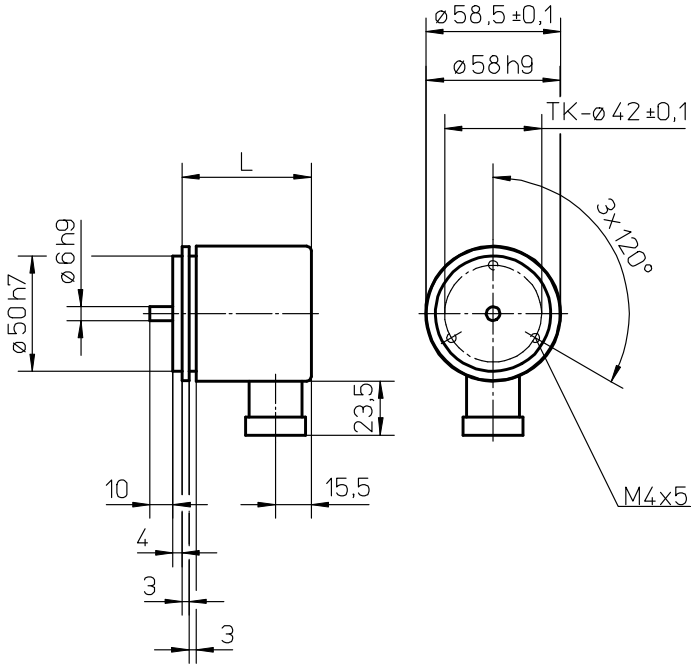


### IG602 Encoders, part numbers

| Encoder type | Supply voltage [Vdc] | Pulses per revolution | p/n |
|---|---|---|---|
| Type 1 | 5 | 100 | 671 521 0194 |
| Type 1 | 5 | 200 | 671 521 0195 |
| Type 1 | 5 | 500 | 671 521 0196 |
| Type 1 | 5 | 600 | 671 521 0197 |
| Type 1 | 5 | 1000 | 671 521 0198 |
| Type 1 | 5 | 1250 | 671 521 0199 |
| Type 1 | 5 | 1500 | 671 521 0200 |
| Type 1 | 5 | 2000 | 671 521 0192 |
| Type 1 | 5 | 2500 | 671 521 0201 |
| Type 2 | 10 – 30 | 100 | 671 521 0193 |
| Type 2 | 10 – 30 | 200 | 671 521 0202 |
| Type 2 | 10 – 30 | 500 | 671 521 0203 |
| Type 2 | 10 – 30 | 600 | 671 521 0204 |
| Type 2 | 10 – 30 | 600 | |

### STE001 Encoder Connector, data

| Parameter | | STE001 |
|---|---|---|
| Number of poles | | 12 |
| Protection class | | IP67 |
| Execution | | jack |
| Cable entrance | | straight |
| Weight | [kg] | 0,04 |
| Part number | | 6715600153 |

### Encoder Cable, data

| Parameter | p/n |
|---|---|
| 5 m cable length | 671 555 0068 |
| 10 m cable length | 671 555 0069 |

The encoder cables come fitted with a STE001 encoder connector in one of the ends.

# Accessories

## Electrical Feedback Devices

### ES Limit Switch Option Kit

| Unit type | I | II | III | A | B | C | D | E | F | G |
|---|---|---|---|---|---|---|---|---|---|---|
| WH50 [1] | • | | | 34 | 60,5 | 10 | 26 | 49 | 58,5 | 196 |
| WH80 | • | | | 31 | 76 | 10 | 39 | 49 | 78,5 | 196 |
| WH120 | • | | | 34 | 88 | 10 | 51 | 49 | 78,5 | 196 |
| WHZ50 | • | | | 34 | 61 | 10 | 26 | 49 | 58,5 | 196 |
| WHZ80 | • | | | 31 | 76 | 10 | 39 | 49 | 78,5 | 196 |
| WM60 | | • | | 40 | 69 | 32 | 38 | 50 | 63 | 200 |
| WM80 | | • | | 40 | 73 | 32 | 42 | 50 | 79 | 200 |
| WM120 | | • | | 40 | 89 | 32 | 58 | 50 | 94 | 200 |
| WM60Z | • | | | 40 | 69 | 32 | 38 | 50 | 73 | 200 |
| WM80Z [2] | • | | | 40 | 73 | 32 | 42 | 50 | 99 (89) | 200 |
| WV60 | | • | | 40 | 69 | 32 | 38 | 50 | 33 | 200 |
| WV80 | | • | | 40 | 73 | 32 | 42 | 50 | 39 | 200 |
| WV120 | | • | | 40 | 89 | 32 | 58 | 50 | 59 | 200 |
| MLSM60D | | • | | 40 | 73 | 32 | 32 | 50 | 79 | 200 |
| MLSH60Z | • | | | 40 | 73 | 32 | 42 | 50 | 79 | 200 |
| MLSM80D | | • | | 40 | 85 | 32 | 54 | 50 | 101 | 200 |
| MLSM80Z | | • | | 40 | 85 | 32 | 54 | 50 | 101 | 200 |

[1] Limit switches for these units can not be moved. On all other units the switches can be re-positioned by the customer. [2] Value in brackets = for short carriage.

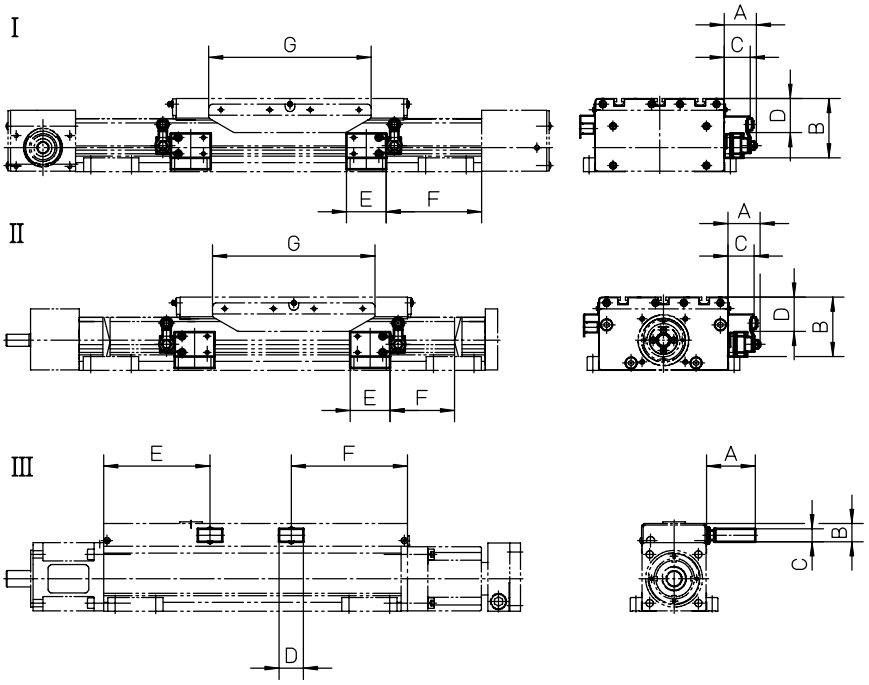


The ES limit switch assembly is an option that is mounted at the factory. The limit switches are placed 10 mm from the mechanical ends of the unit. Each limit switch has one NO and one NC contact with positive opening action. Protection degree is IP67. Type I and II switches can be repositioned along the profile by the customer. Note! The ES limit switch option and any of the sensor rail options ENT14x16, ENF14x16 or ENK can not be mounted on the same side of the unit.

# Accessories

## Electrical Feedback Devices

### ES Limit Switch Option Kit, ordering key

| | 1 | 2 | 3 | 4 |
|---|---|---|---|---|
| Example | ESK07 | -L | -01 | -10 |

**1. Compatible unit**
ESK02 = WH50
ESK03 = WH80
ESK04 = WH120
ESK05 = WM40
ESK06 = WM60 / WM60Z
ESK07 = WM80 / WM80Z
ESK08 = WM120
ESK09 = WV60
ESK10 = WV80
ESK11 = WV120
ESK12 = WHZ50
ESK13 = WHZ80
ESK16 = MLSH60Z
ESK18 = MLSM80Z
ESK19 = MLSM60D
ESK20 = MLSM80D

**2. Mounting side of the unit**
-L = left side
-R = right side

**3. Switch configuration on side A**
-00 = no switch on side A
-01 = switch with 1 m cable
-05 = switch with 5 m cable
-10 = switch with 10 m cable

**4. Switch configuration on side B**
-00 = no switch on side B
-01 = switch with 1 m cable
-05 = switch with 5 m cable
-10 = switch with 10 m cable

ES-••-R-••-••

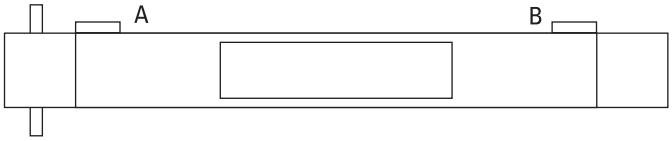


ES-••-L-••-••

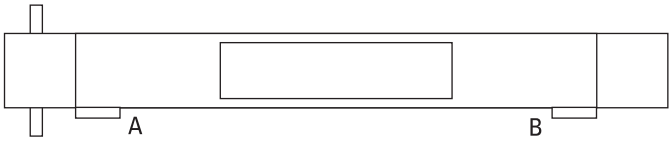

# Accessories

## Electrical Feedback Devices

### ENT14x16 Inductive Sensor Rail

| Unit type | p/n |
|---|---|
| WH40 / WH50 / WH80 / WH120 / WHZ50 / WHZ80 / WM40 / WM60 / WM80 / WM60Z / WM80Z / WV60 / WV80 / MLSM60D / MLSM80D / MLSH60Z / MLSM80Z | 671 545 0283 |

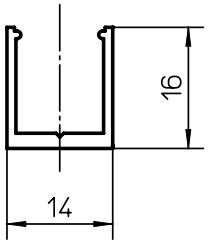


The ENT14x16 inductive sensor rail is mounted to the side of a unit or along any type of beam or profile. Sensors of type EN2 can be mounted in the rail. The rail can also serve as a cable duct for the sensor cables. The rail is sealed with a cover which comes with the rail. The rail comes in lengths of max 3000 mm. Drilling in the profile of the unit is required when mounting the rail. When ordering, specify part number and length of the rail. Note1! WM120 and WV120 units do not require any rail as the EN2 sensors can be fitted directly to the profile of the units. Note2! ES limit switch option and ENT14x16 rail can not be mounted on the same side of the unit.

### ENF and ENK Inductive Sensor Rail Option Kit, compatibility table

| Unit type | ENF / ENK |
|---|---|
| WH40 / WH50 / WH80 / WH120 / WHZ50 / WHZ80 / WM40 / WM60 / WM80 / WM60Z / WM80Z / WV60 / WV80 / MLSM60D / MLSM80D / MLSH60Z / MLSM80Z / M50 / M75 / M100 | • |

ENF

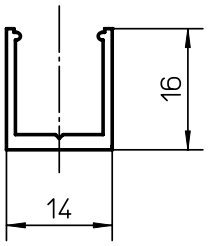


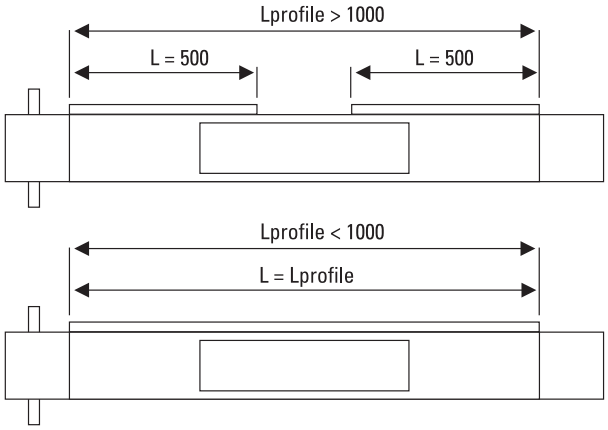


ENK

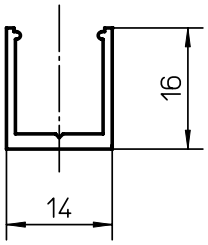


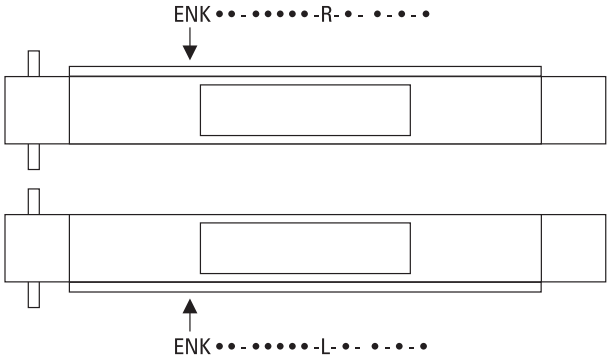


The ENF and ENK inductive sensor rail option kits are mounted at the factory. The ENF option consists of two 500 mm long ENT14x16 sensor rails mounted in each end of the unit on the left or right side of the profile. In cases where the unit is too short to allow two 500 mm sensor rails to be mounted, then one rail is mounted along the entire profile of the unit. The ENK option also consists of ENT14 x16 sensor rails but the ENK option has sensor profiles that run along the entire profile of the unit. In the shipment of both ENF and ENK the specified amount and type of EN2 sensors are included. The sensors are fitted to the sensor rail by the customer at the desired positions.

**Note1!** WM120 and WV120 units do not require any ENF or ENK options as the EN2 sensors can be fitted directly to the profile of the units.
**Note2!** The ES limit switch option and ENF rail can not be mounted on the same side of the unit.
**Note3!** Movopart M50/75/100 units require adapter plates for mounting the ENF/ENK to the profile. See page 121 for adapter plate dimensions.

# Accessories

## Electrical Feedback Devices

### ENK and ENF Inductive Sensor Rail Option Kit, ordering key

| | 1 | 2 | 3 | 4 | 5 | 6 | 7 | 8 |
|---|---|---|---|---|---|---|---|---|
| Example | ENK01 | -S | -04000 | -R | -2 | -0 | -1 | -6 |

**1. Type of rail and compatible unit**

| | |
|---|---|
| ENK01 = ENK rail for WH40 | ENF01 = ENF rail for WH40 |
| ENK02 = ENK rail for WH50 | ENF02 = ENF rail for WH50 |
| ENK03 = ENK rail for WH80 | ENF03 = ENF rail for WH80 |
| ENK04 = ENK rail for WH120 | ENF04 = ENF rail for WH120 |
| ENK05 = ENK rail for WM40 | ENF05 = ENF rail for WM40 |
| ENK06 = ENK rail for WM60 / WV60 | ENF06 = ENF rail for WM60 / WV60 |
| ENK07 = ENK rail for WM80 / WV80 | ENF07 = ENF rail for WM80 / WV80 |
| ENK08 = ENK rail for WM120 / WV120 | ENF08 = ENF rail for WM120 / WV120 |
| ENK09 = ENK rail for WM60Z | ENF09 = ENF rail for WM60Z |
| ENK10 = ENK rail for WM80Z | ENF10 = ENF rail for WM80Z |
| ENK11 = ENK rail for WHZ50 | ENF11 = ENF rail for WHZ50 |
| ENK12 = ENK rail for WHZ80 | ENF12= ENF rail for WHZ80 |
| ENK15 = ENK rail for MLSH60Z | ENF15 = ENF rail for MLSH60Z |
| ENK17 = ENK rail for MLSM80Z | ENF17 = ENF rail for MLSM80Z |
| ENK18 = ENK rail for MLSM60D | ENF18 = ENF rail for MLSM60D |
| ENK19 = ENK rail for MLSM80D | ENF19 = ENF rail for MLSM80D |
| ENK28 = ENK rail for MF/MG07S | ENF28 = ENF rail for MF/MG07S |
| ENK29 = ENK rail for MF/MG06S | ENF29 = ENF rail for MF/MG06S |
| ENK30 = ENK rail for MF/MG06B | ENF30 = ENF rail for MF/MG06B |
| ENK31 = ENK rail for MF/MG07B | ENF31 = ENF rail for MF/MG07B |
| ENK32 = ENK rail for MF/MG10S | ENF32 = ENF rail for MF/MG10S |
| ENK33 = ENK rail for MF/MG10B | ENF33 = ENF rail for MF/MG10B |

**2. Number of carriages**
-S = single carriage
-D = double carriages

**3. Total length of unit (L tot)**
- vvvvv = distance in mm

**4. Mounting side of the unit**
-L = left side
-R = right side

**5. Number of EN2 sensors with NC contact and 2 m cable**
- w = 0 – 9 sensors / normally closed / 2 m cable

**6. Number of EN2 sensors with NO contact and 2 m cable**
- x = 0 – 9 sensors / normally open / 2 m cable

7. **Number of EN2 sensors with NC contact and 10 m cable**
- y = 0 – 9 sensors / normally closed / 10 m cable

8. **Number of EN2 sensors with NO contact and 10 m cable**
- z = 0 – 9 sensors / normally open / 10 m cable

## ADG Encoder Option Kit

| Unit type | Mounting type I | Mounting type II | A | B | øC | D |
|---|---|---|---|---|---|---|
| WH40 | • | | 115 | 95 | 58,5 | ø60 |
| WH50 / WHZ50 | • | | 120 | 96 | 58,5 | 50 × 50 |
| WH80 / WHZ80 | • | | 139 | 100 | 58,5 | 90 × 90 |
| WH120 | • | | 153 | 93 | 58,5 | 100 × 100 |
| WM40 | | • | 25 | 95 | 58,5 | – |
| WM60 | | • | 31 | 95 | 58,5 | – |
| WM80 | | • | 40 | 95 | 58,5 | – |
| WM120 | | • | 74 | 95 | 58,5 | – |
| WM60Z | • | | 124 | 94 | 58,5 | 60 × 60 |
| WM80Z | • | | 138 | 98 | 58,5 | 65 × 65 |
| MLSM60D | | • | 37 | 95 | 58,5 | – |
| MLSM80D | | • | 46 | 95 | 58,5 | – |
| MLSH60Z | • | | 174,5 | 95 | 58,5 | 78 × 59 |
| MLSM80Z | • | | 214,5 | 95 | 58,5 | 100 × 80 |

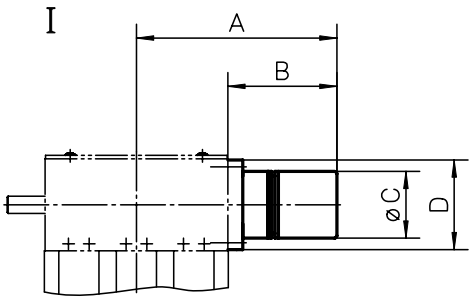


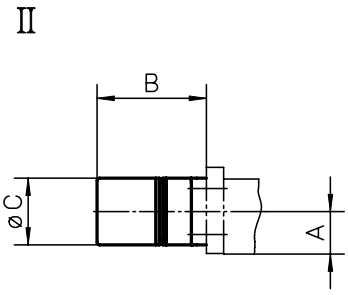


The ADG encoder option kit is an option that is mounted to the unit at the factory. It includes an IG602 encoder, a STE001 encoder connector and an encoder mounting flange with coupling. Cable can also be supplied in 5 or 10 meter lengths.

# Accessories

## Electrical Feedback Devices

### ADG Encoder Option Kit, ordering key

| | 1 | 2 | 3 |
|---|---|---|---|
| Example | ADG-08 | -05-0600 | -00 |

**1. Compatible unit**
ADG-01 = WH40
ADG-02 = WH50 / WHZ50
ADG-03 = WH80 / WHZ80
ADG-04 = WH120
ADG-05 = WM40
ADG-06 = WM60 / WV60
ADG-07 = WM80 / WV80
ADG-08 = WM120 / WV120
ADG-09 = WM60Z
ADG-10 = WM80Z
ADG-11 = MLSH60Z
ADG-13 = MLSM80Z
ADG-14 = MLSM60D
ADG-15 = MLSM80D

**2. Supply voltage and number of pulses**
-05-0100 = 5 volts, 100 pulses per revolution
-05-0200 = 5 volts, 200 pulses per revolution
-05-0500 = 5 volts, 500 pulses per revolution
-05-0600 = 5 volts, 600 pulses per revolution
-05-1000 = 5 volts, 1000 pulses per revolution
-05-1250 = 5 volts, 1250 pulses per revolution
-05-2000 = 5 volts, 2000 pulses per revolution
-05-2500 = 5 volts, 2500 pulses per revolution
-24-0100 = 10 - 30 volts, 100 pulses per revolution
-24-0200 = 10 - 30 volts, 200 pulses per revolution
-24-0500 = 10 - 30 volts, 500 pulses per revolution
-24-0600 = 10 - 30 volts, 600 pulses per revolution

**3. Cable and connector configuration**
-00 = no cable only STE001 encoder connector
-05 = 5 m cable with STE001 encoder connector in one of the ends
-10 = 10 m cable with STE001 encoder connector in one of the ends

# Accessories

## Non-driven Linear Motion Systems

### WH40N

» Ordering key - see page 192
» Technical data - see page 74

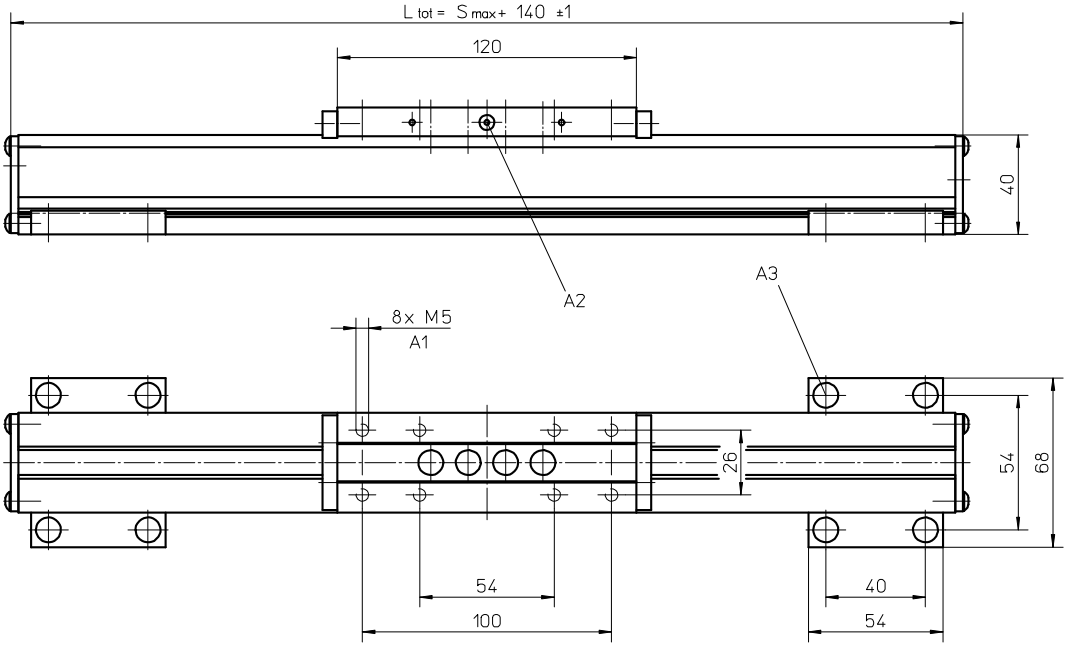


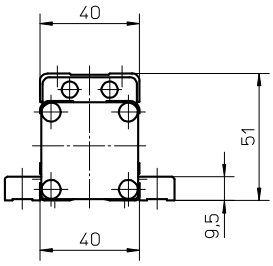


A1: depth 10
A2: lubricating nipple on both sides DIN3405 D 1/A

A3: socket cap screw ISO4762-M5×12 8.8

### WH50N

» Ordering key - see page 192
» Technical data - see page 102

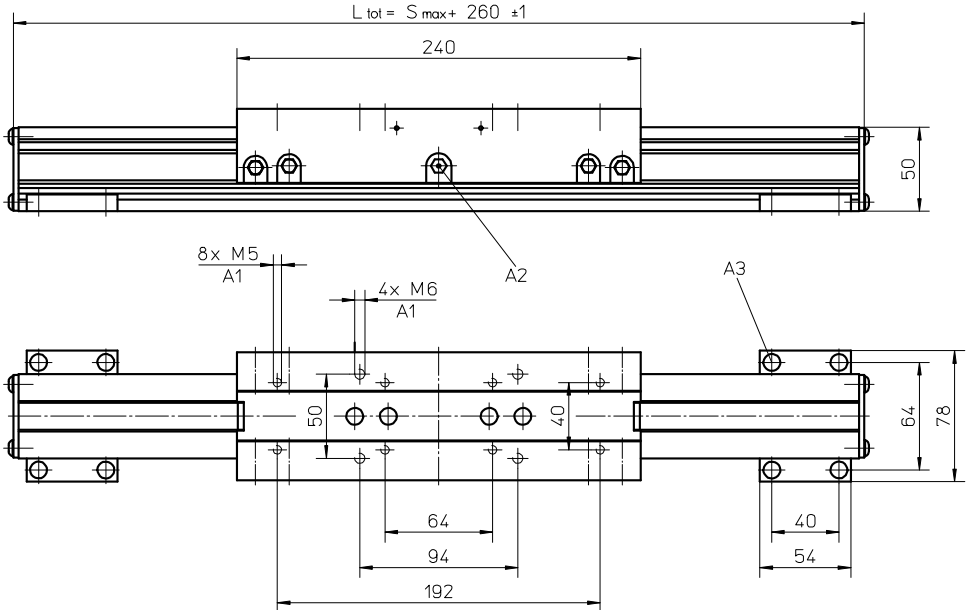


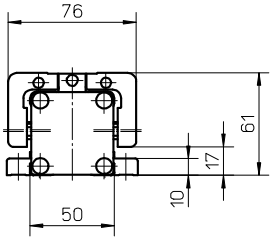


A1: depth 10
A2: funnel type lubricating nipple DIN3405-M6×1-D1

A3: socket cap screw ISO4762-M5×12 8.8

# Accessories

## Non-driven Linear Motion Systems

| Dimensions | Projection | Online Sizing & Selection! |
|---|---|---|
| METRIC | | www.LinearMotioneering.com |

## WH80N

» Ordering key - see page 192
» Technical data - see page 104

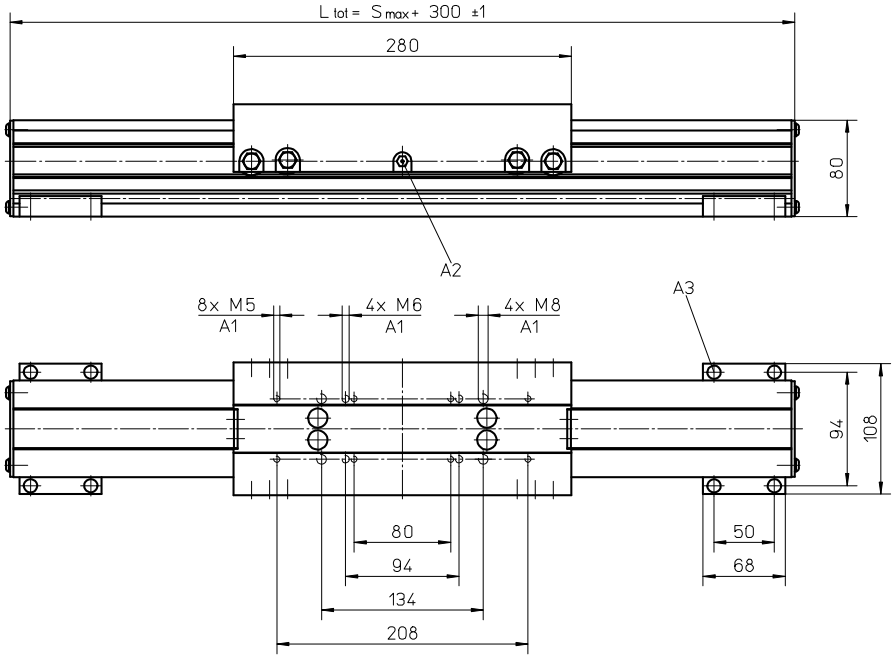


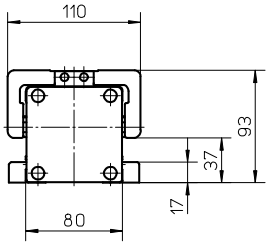


A1: depth 12
A2: funnel type lubricating nipple DIN3405-M6×1-D1

A3: socket cap screw ISO4762-M6×20 8.8

## WH120N

» Ordering key - see page 192
» Technical data - see page 106

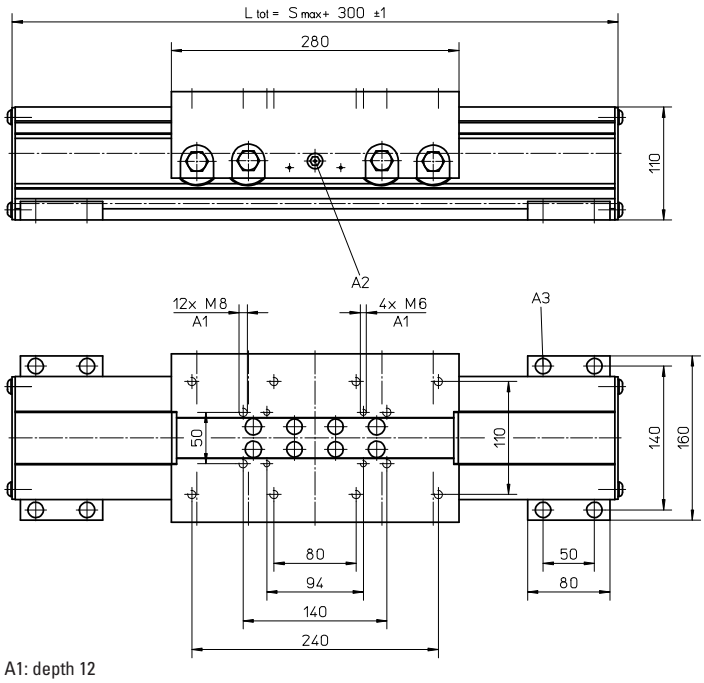


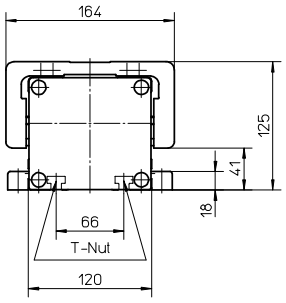


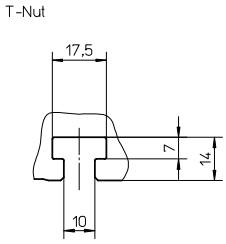


A1: depth 12
A2: funnel type lubricating nipple DIN3405-M6×1-D1

A3: socket cap screw ISO4762-M8×20 8.8

| Dimensions | Projection | Online Sizing & Selection! |
|---|---|---|
| METRIC | | www.LinearMotioneering.com |

## WM40N

» Ordering key - see page 192
» Technical data - see page 14

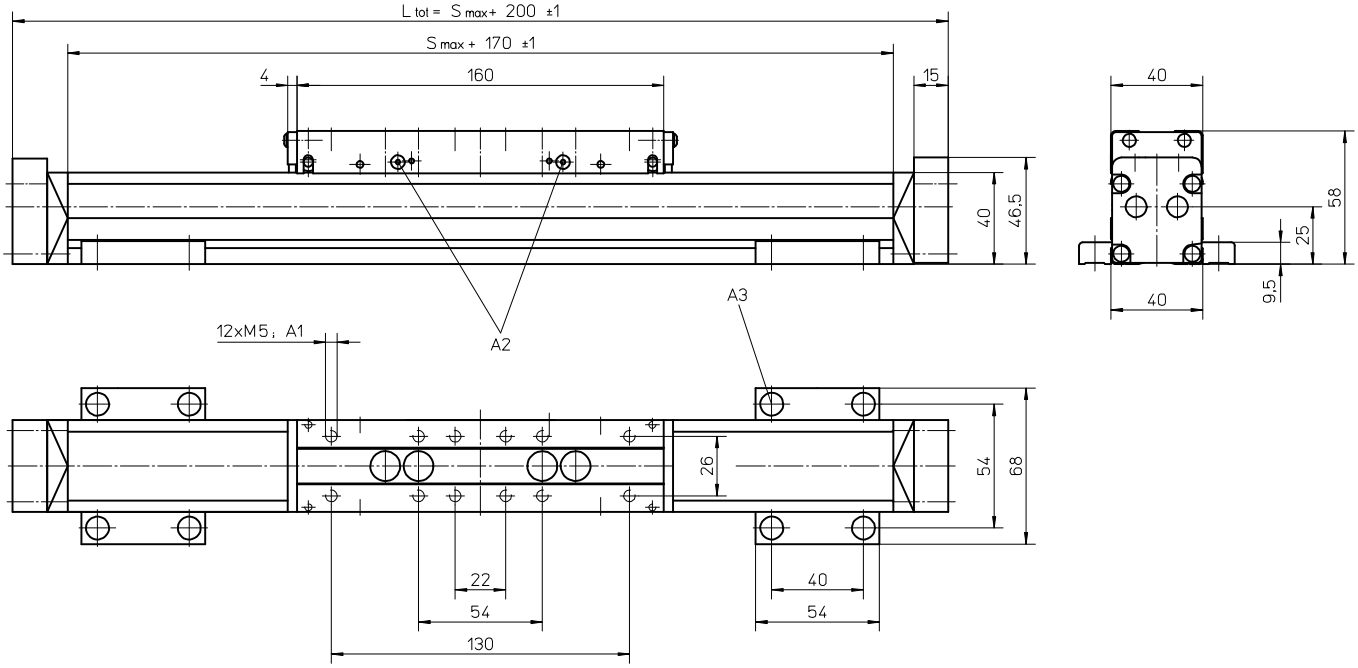


A1: depth 7
A2: lubricating nipple on both sides DIN3405 D 1/A
A3: socket cap screw ISO4762-M5×12 8.8

## WM60N

» Ordering key - see page 192
» Technical data - see page 18

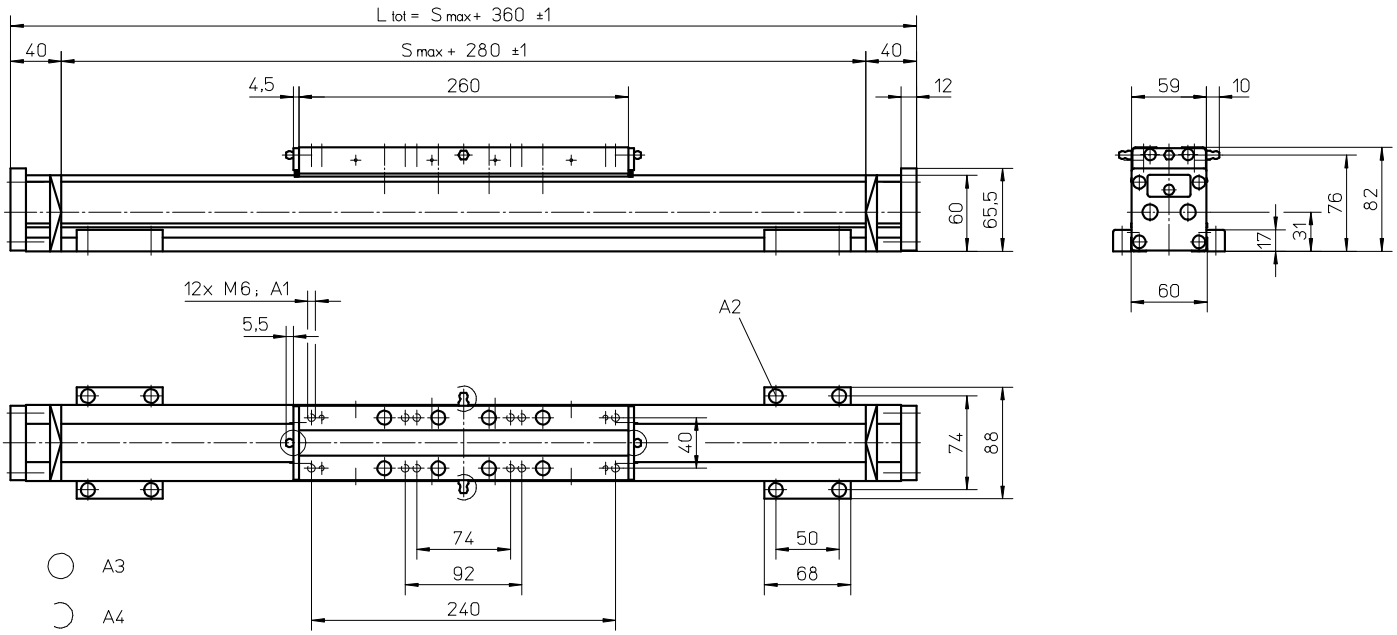


A1: depth 11
A2: socket cap screw ISO4762-M6×20 8.8
A3: tapered lubricating nipple to DIN71412 AM6
A4: can be changed over to one of the three alternative lubricating points by the customer

# Accessories

## Non-driven Linear Motion Systems

| Dimensions | Projection | Online Sizing & Selection! |
|---|---|---|
| METRIC | | www.LinearMotioneering.com |

## WM60N with Single Short Carriage

» Ordering key - see page 192
» Technical data - see page 20

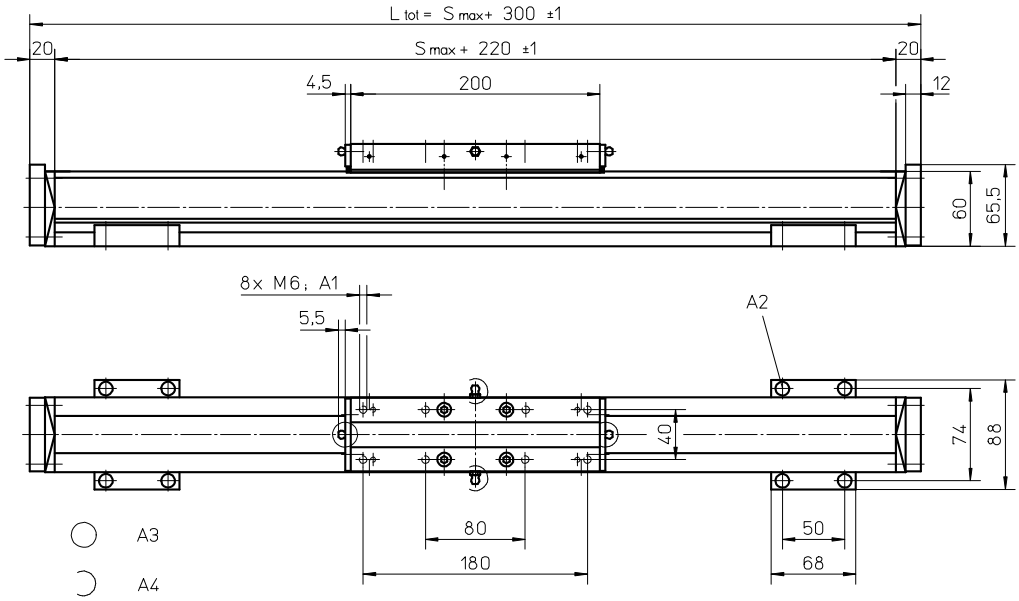


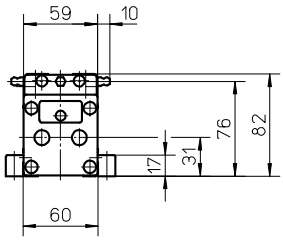


A1: depth 11
A2: socket cap screw ISO4762-M6×20 8.8

A3: tapered lubricating nipple to DIN71412 AM6
A4: can be changed over to one of the three alternative lubricating points by the customer

## WM80N

» Ordering key - see page 192
» Technical data - see page 24

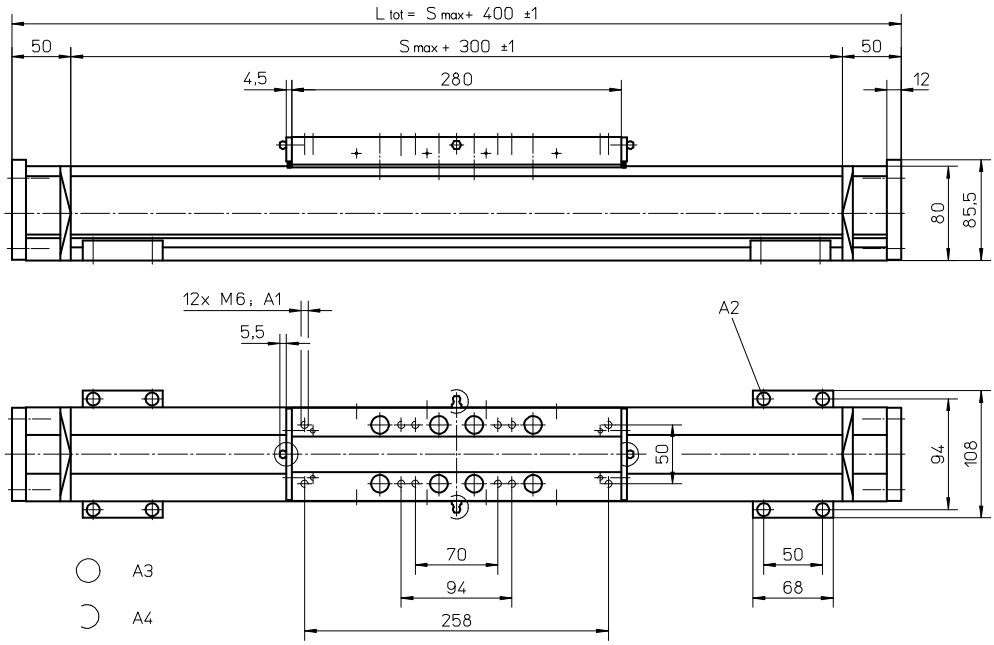


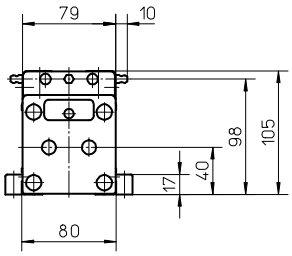


A1: depth 12
A2: socket cap screw ISO4762-M6×20 8.8

A3: tapered lubricating nipple to DIN71412 AM6
A4: can be changed over to one of the three alternative lubricating points by the customer

# Accessories

## Non-driven Linear Motion Systems

| Dimensions | Projection | Online Sizing & Selection! |
|---|---|---|
| METRIC | | www.LinearMotioneering.com |

## WM80N with Single Short Carriage

» Ordering key - see page 192
» Technical data - see page 26

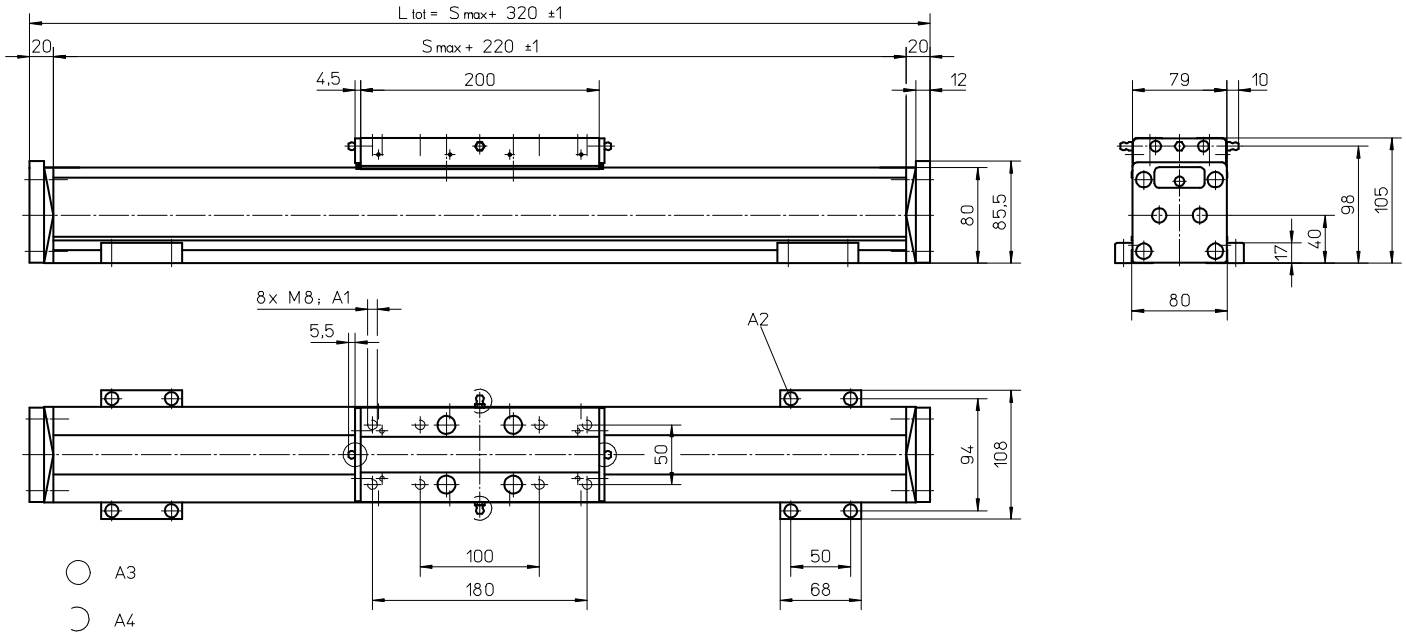


A1: depth 12
A2: socket cap screw ISO4762-M6×20 8.8

A3: tapered lubricating nipple to DIN71412 AM6
A4: can be changed over to one of the three alternative lubricating points by the customer

## WM120N

» Ordering key - see page 192
» Technical data - see page 34

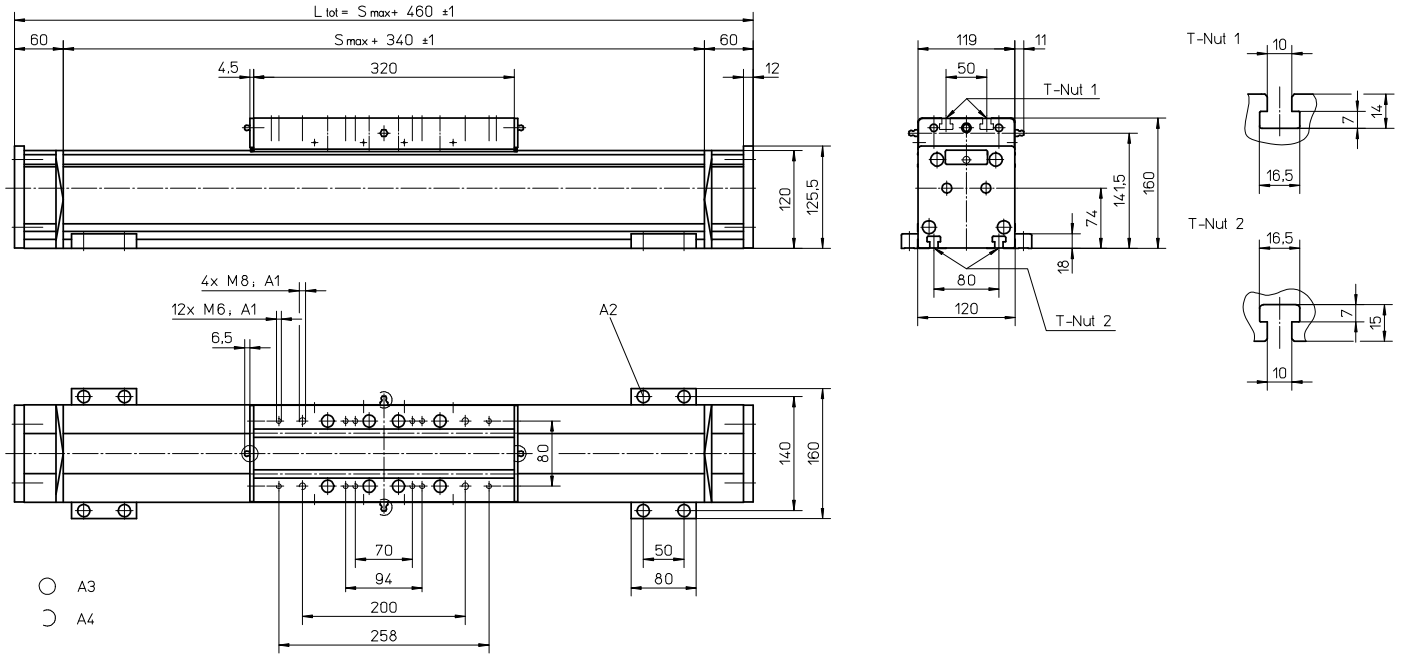


A1: depth 22
A2: socket cap screw ISO4762-M8×20 8.8

A3: tapered lubricating nipple to DIN71412 M8×1
A4: can be changed over to one of the three alternative lubricating points by the customer

# Accessories

## Non-driven Linear Motion Systems

| Dimensions | Projection | Online Sizing & Selection! |
|---|---|---|
| METRIC | | www.LinearMotioneering.com |

## M75N

» Ordering key - see page 193
» Technical data - see page 42

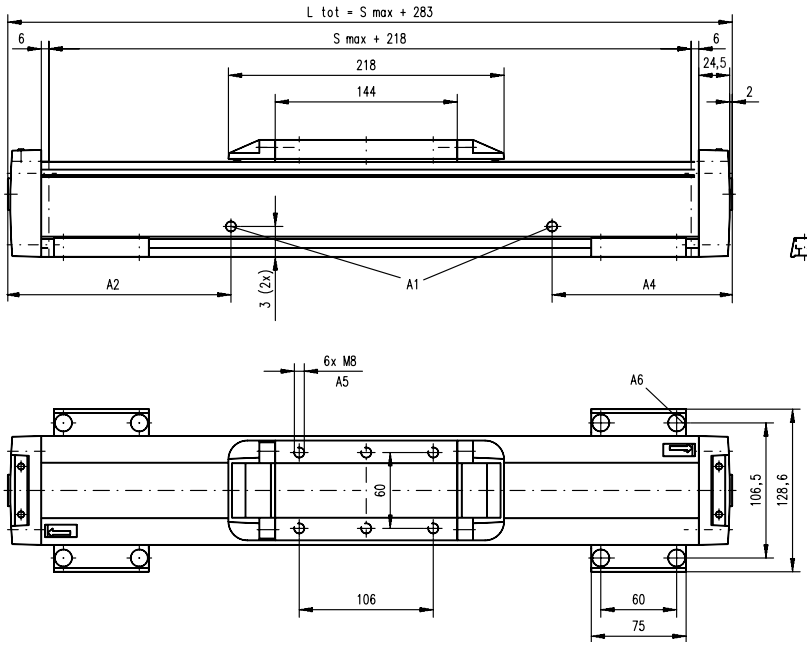


A1: slide guide tensioning holes ø6 (MG07N), lubrication holes ø10 (MF07N)
A2: 177 (MG07N), 127 (MF07N)
A3: 24 (MG07N), 43 (MF07N)
A4: 326 (MG07N), 346 (MF07N)
A5: depth 8 Heli coil
A6: ø13,5 / ø 8,5 for socket head cap screw M8

## M100N

» Ordering key - see page 193
» Technical data - see page 44

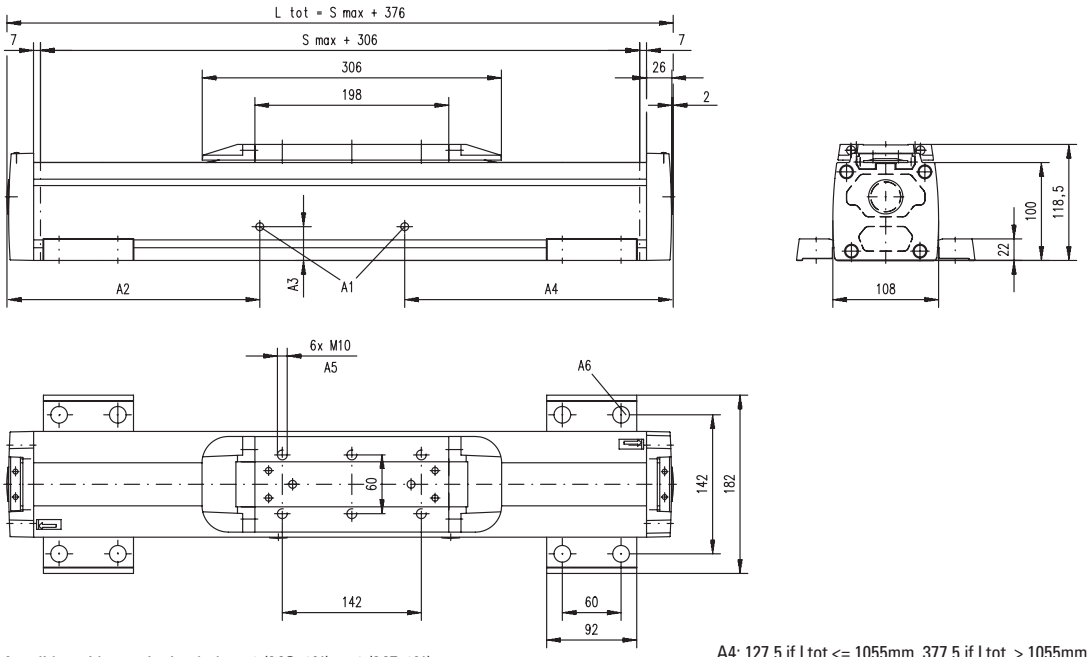


A1: slide guide tensioning holes ø6 (MG10N), ø10 (MF10N)
A2: 127,5 if Ltot <=1055mm,
227,5 if Ltot > 1055mm (MG10N), 292,5 (MF10N)
A3: 34,5 (MG10N), 56,5 (MF10N)
A4: 127,5 if Ltot <= 1055mm, 377,5 if Ltot > 1055mm (MG10N),
292,5 if Ltot => 755mm, no hole if Ltot < 755mm (MF10N)
A5: depth 10 Heli coil
A6: ø17 / ø 10,5 for socket head cap screw M10

# Accessories

## Non-RediMount Linear Motion Systems

| Dimensions | Projection | Online Sizing & Selection! |
|---|---|---|
| METRIC | | www.LinearMotioneering.com |

## WM40

» Ordering key - see page 176
» Technical data - see page 14 - 17

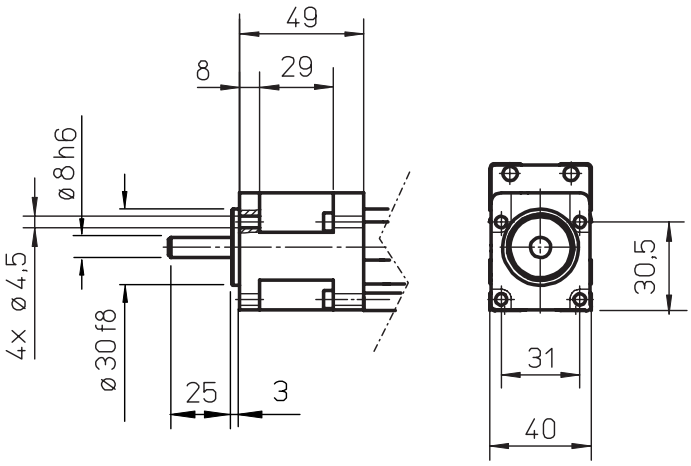


## WM60, WV60

» Ordering key - see page 176, 177
» Technical data - see page 18 - 23, 30

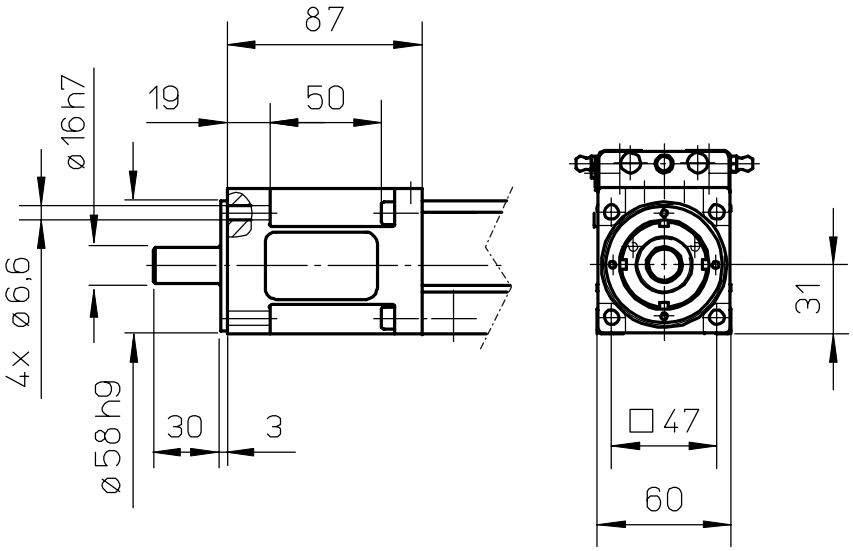

# Accessories

## Non-RediMount Linear Motion Systems

| Dimensions | Projection | Online Sizing & Selection! |
|---|---|---|
| METRIC | | www.LinearMotioneering.com |

### WM80, WV80

» Ordering key - see page 176, 177
» Technical data - see page 24 - 27, 32

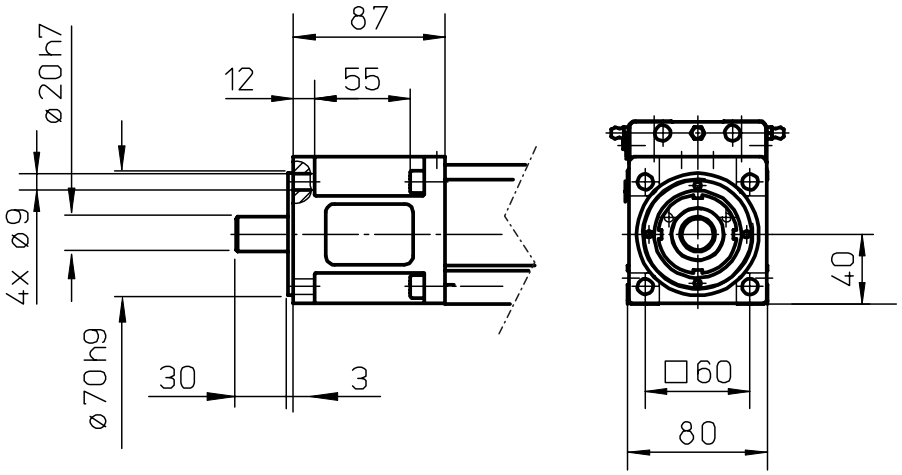


### WM120, WV120

» Ordering key - see page 176, 177
» Technical data - see page 28, 32

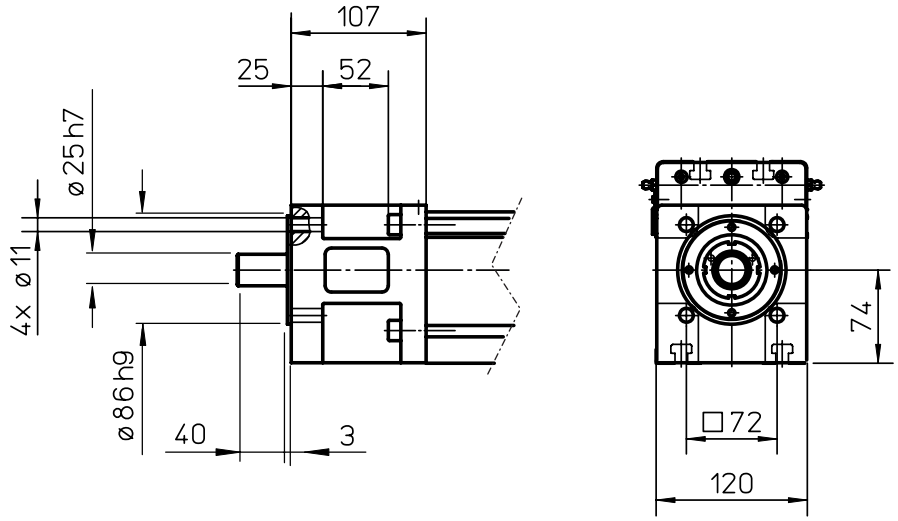

# Accessories

## Non-RediMount Linear Motion Systems

| Dimensions | Projection | Online Sizing & Selection! |
|---|---|---|
| METRIC | | www.LinearMotioneering.com |

## MLSM60D

» Ordering key - see page 178
» Technical data - see page 36

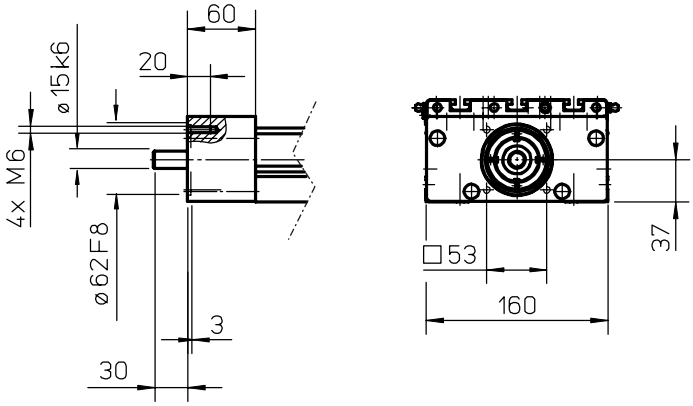


## MLSM80D

» Ordering key - see page 178
» Technical data - see page 38

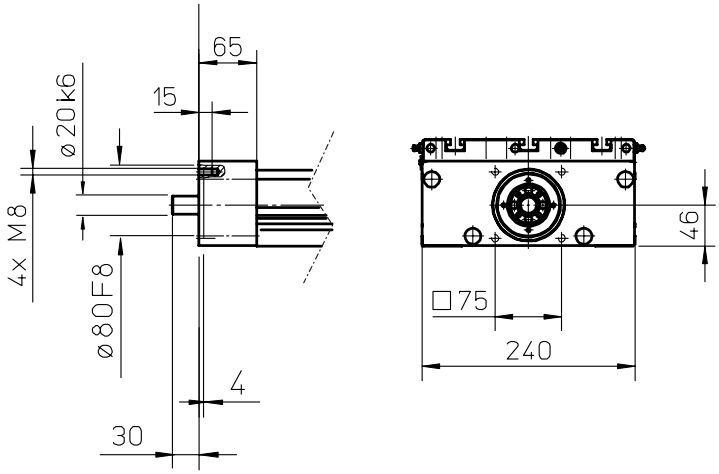

# Accessories

## Non-RediMount Linear Motion Systems

| Dimensions | Projection | Online Sizing & Selection! |
|---|---|---|
| METRIC | | www.LinearMotioneering.com |

## M55 with ball screw drive

» Ordering key - see page 179, 183
» Technical data - see page 40, 66

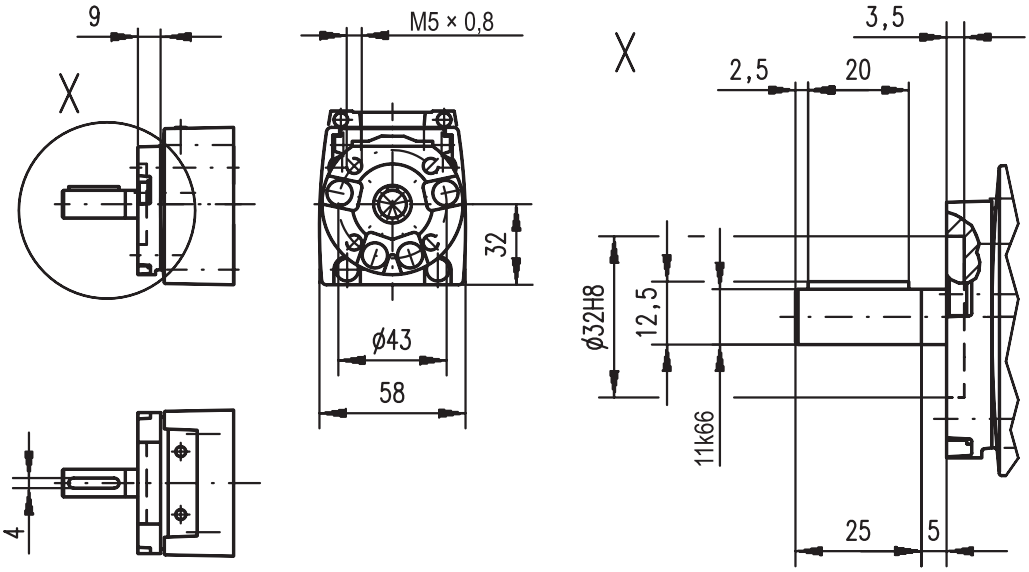


## M75 with ball screw drive

» Ordering key - see page 179, 183
» Technical data - see page 42, 68

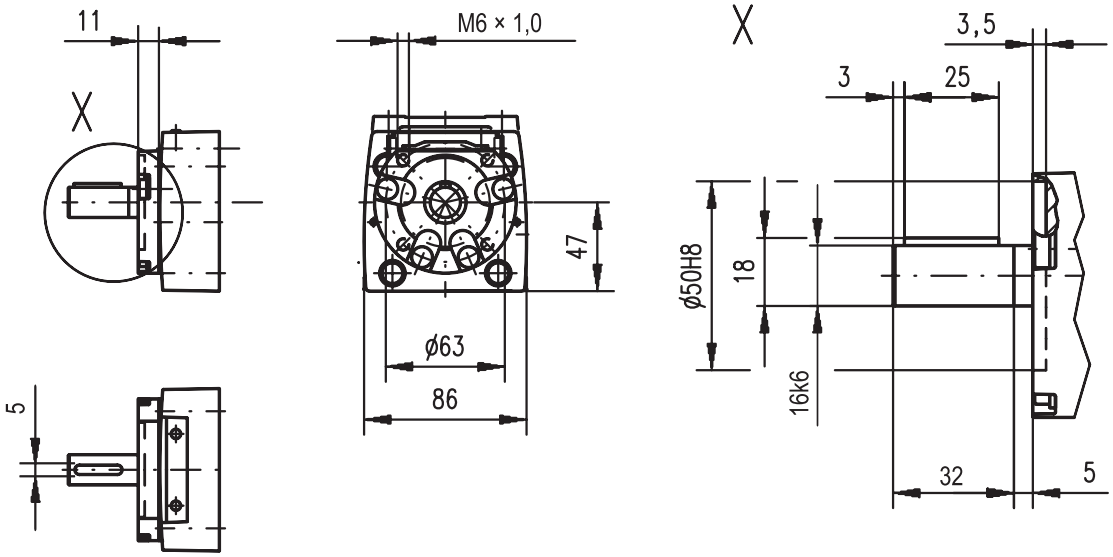

| Dimensions | Projection | Online Sizing & Selection! |
|---|---|---|
| METRIC | | www.LinearMotioneering.com |

## M100 with ball screw drive

» Ordering key - see page 179, 183
» Technical data - see page 44, 70

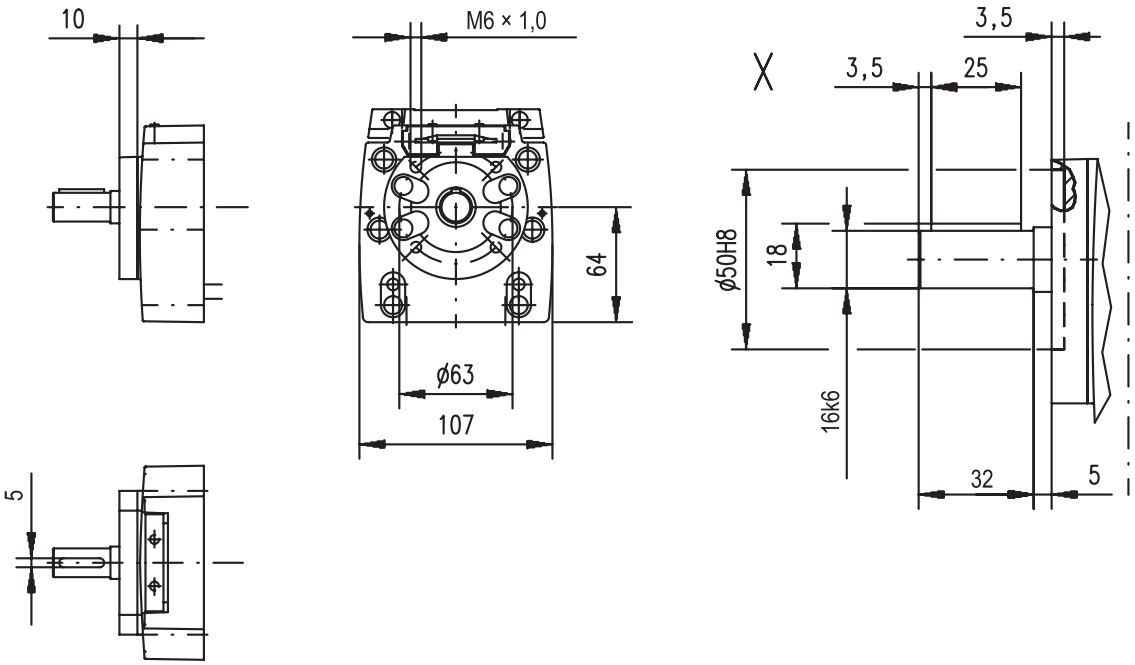


## WH40

» Ordering key - see page 184
» Technical data - see page 74

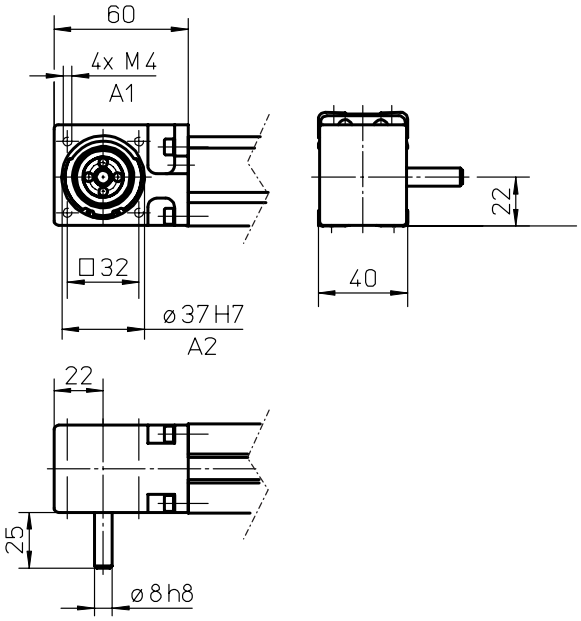


A1: depth 10
A2: depth 3

# Accessories

## Non-RediMount Linear Motion Systems

| Dimensions | Projection | Online Sizing & Selection! |
|---|---|---|
| METRIC | | www.LinearMotioneering.com |

## WM60Z

» Ordering key - see page 185
» Technical data - see page 76

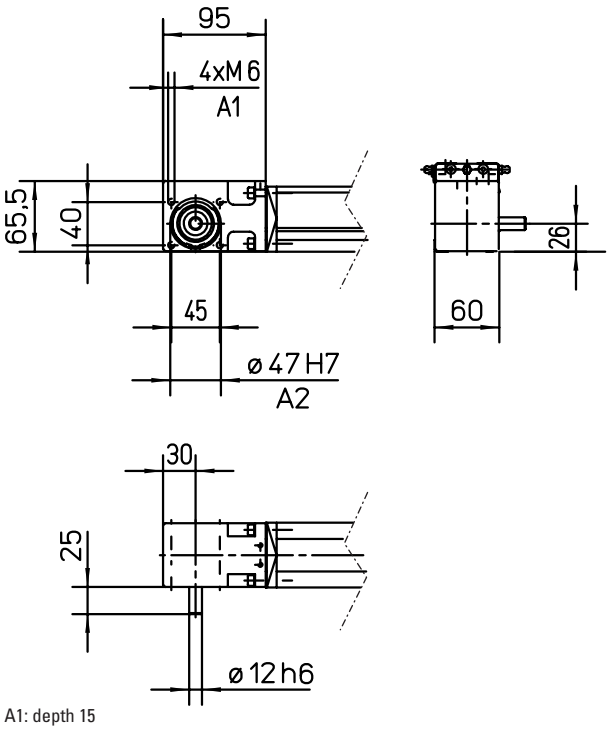


A1: depth 15
A2: depth 4

## WM80Z

» Ordering key - see page 185
» Technical data - see page 78

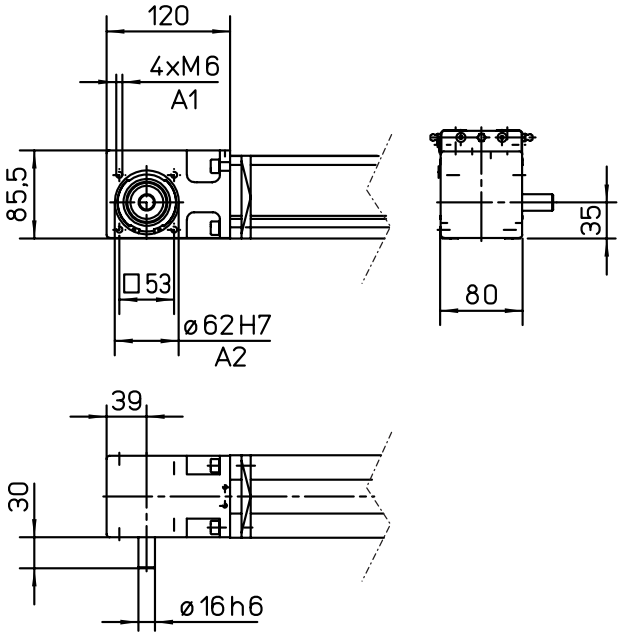


A1: depth 15
A2: depth 2,5

# Accessories

## Non-RediMount Linear Motion Systems

| Dimensions | Projection | Online Sizing & Selection! |
|---|---|---|
| METRIC | | www.LinearMotioneering.com |

## M55 with belt drive

» Ordering key - see page 186, 188
» Technical data - see page 82, 94

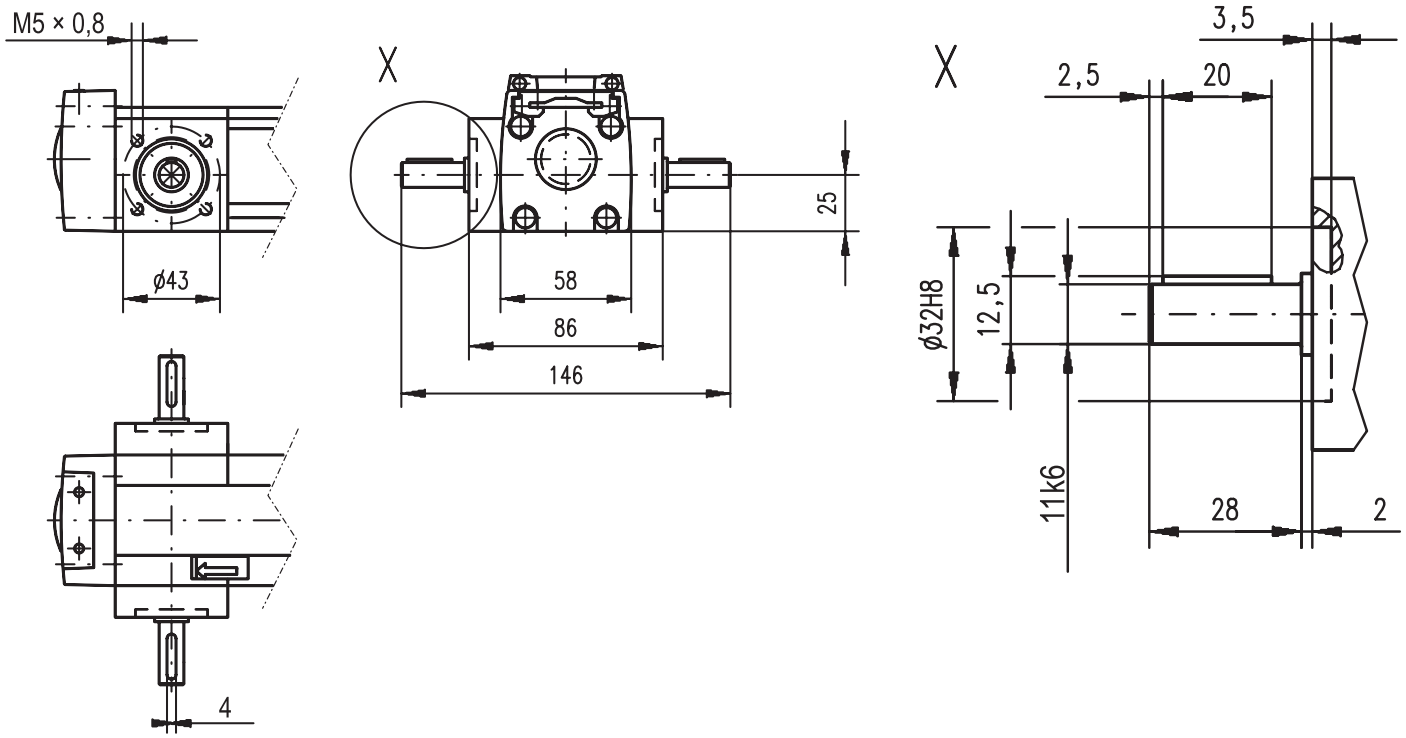


## M75 with belt drive

» Ordering key - see page 186, 188
» Technical data - see page 84, 96

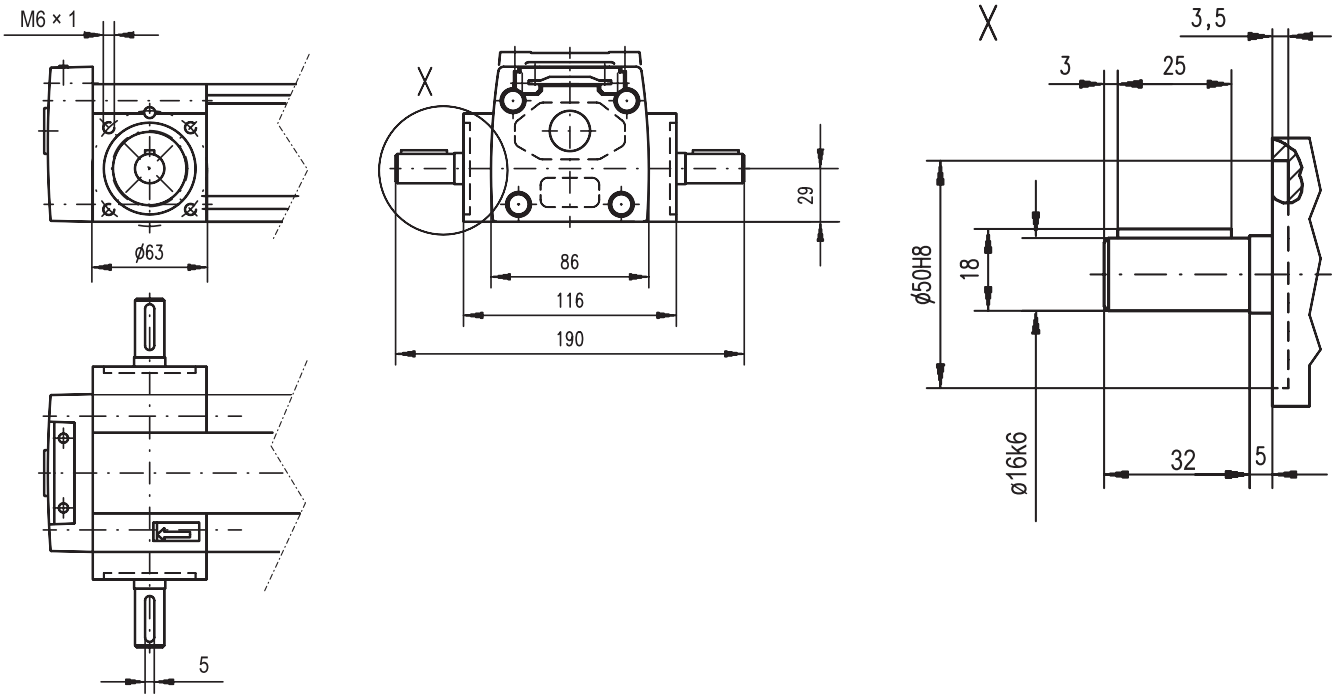

# Accessories

## Non-RediMount Linear Motion Systems

| Dimensions | Projection | Online Sizing & Selection! |
|---|---|---|
| METRIC | | www.LinearMotioneering.com |

## M100 with belt drive

» Ordering key - see page 186, 188
» Technical data - see page 86, 98

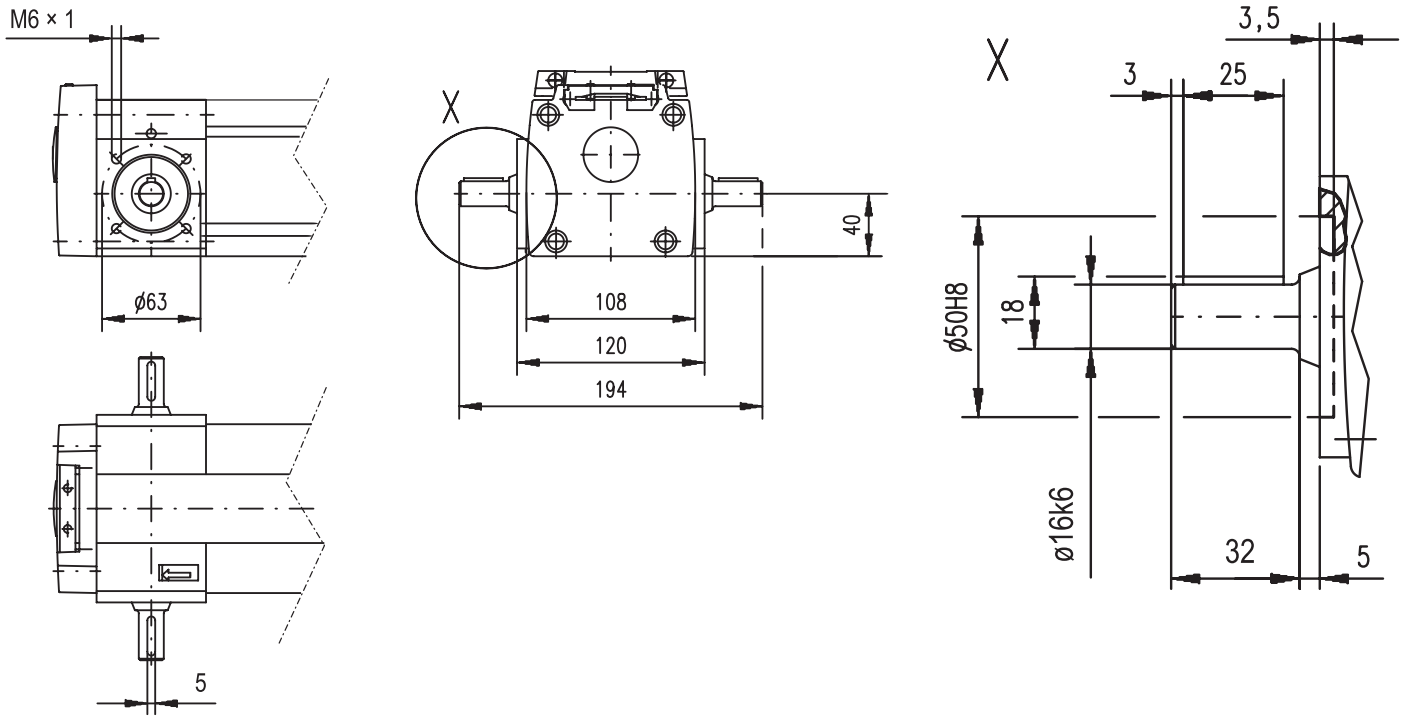


## MLSM80Z

» Ordering key - see page 187
» Technical data - see page 88

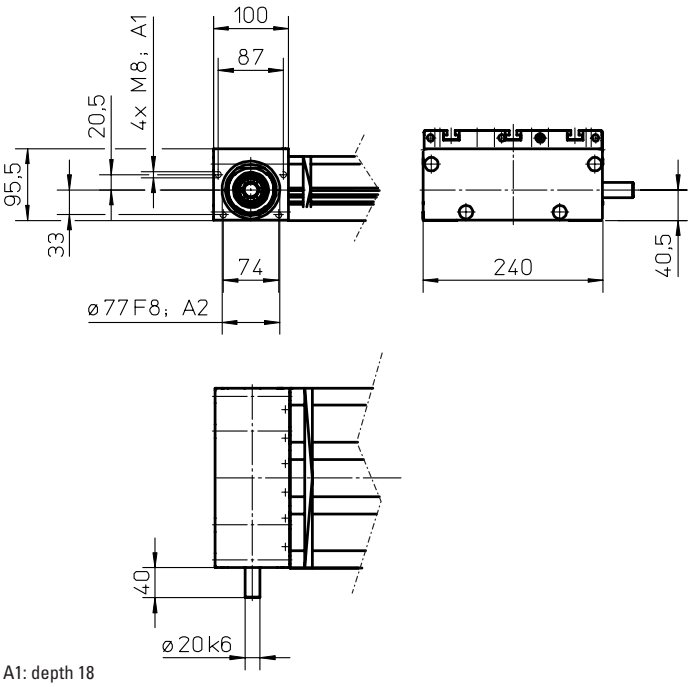


A1: depth 18
A2: depth 4

# Accessories

## Non-RediMount Linear Motion Systems

### M50

» Ordering key - see page 188
» Technical data - see page 92

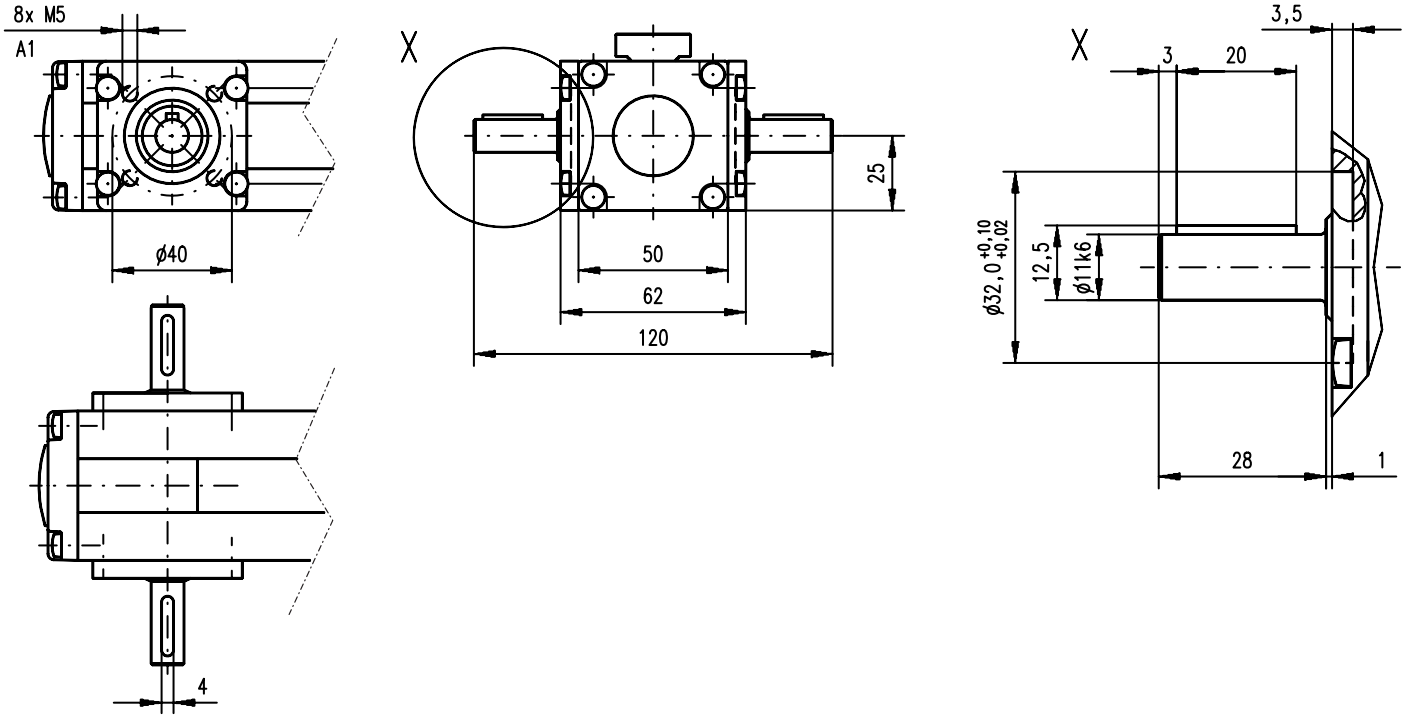


A1: depth 8,5

### WH50

» Ordering key - see page 189
» Technical data - see page 102

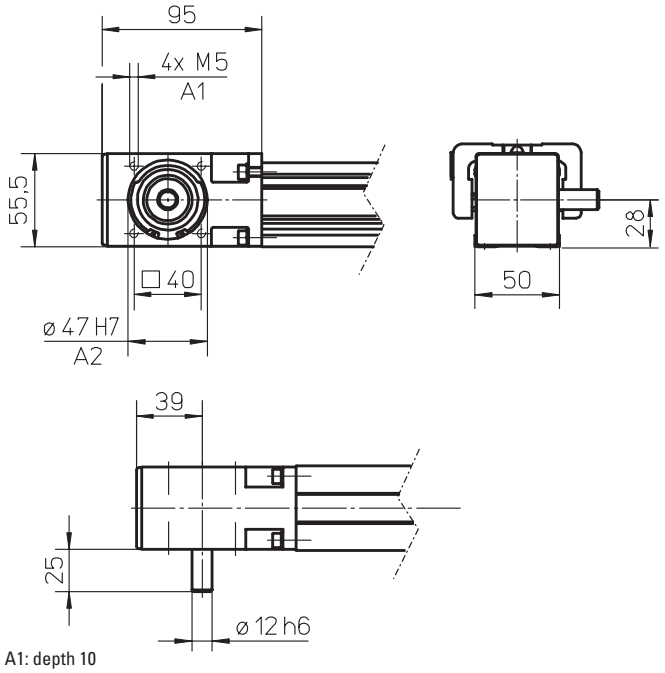


A1: depth 10
A2: depth 3

# Accessories

## Non-RediMount Linear Motion Systems

| Dimensions | Projection | Online Sizing & Selection! |
|---|---|---|
| METRIC | | www.LinearMotioneering.com |

## WH80

» Ordering key - see page 189
» Technical data - see page 104

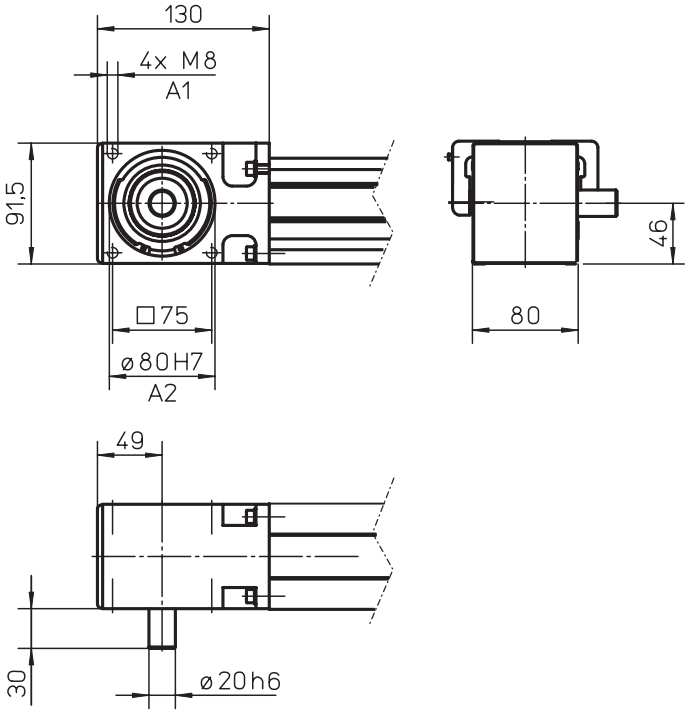


A1: depth 16
A2: depth 2,5

## WH120

» Ordering key - see page 189
» Technical data - see page 106

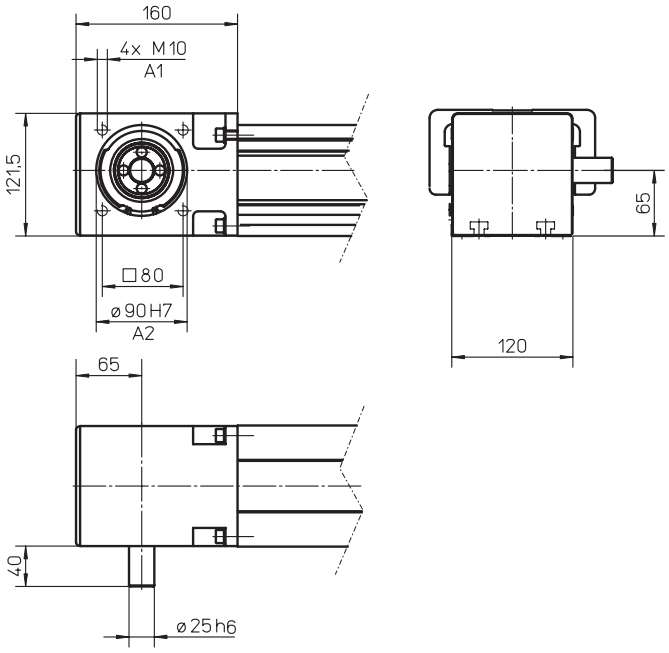


A1: depth 20
A2: depth 7

# Accessories

## Non-RediMount Linear Motion Systems

| Dimensions | Projection | Online Sizing & Selection! |
|---|---|---|
| METRIC | | www.LinearMotioneering.com |

## MLSH60Z

» Ordering key - see page 190
» Technical data - see page 108

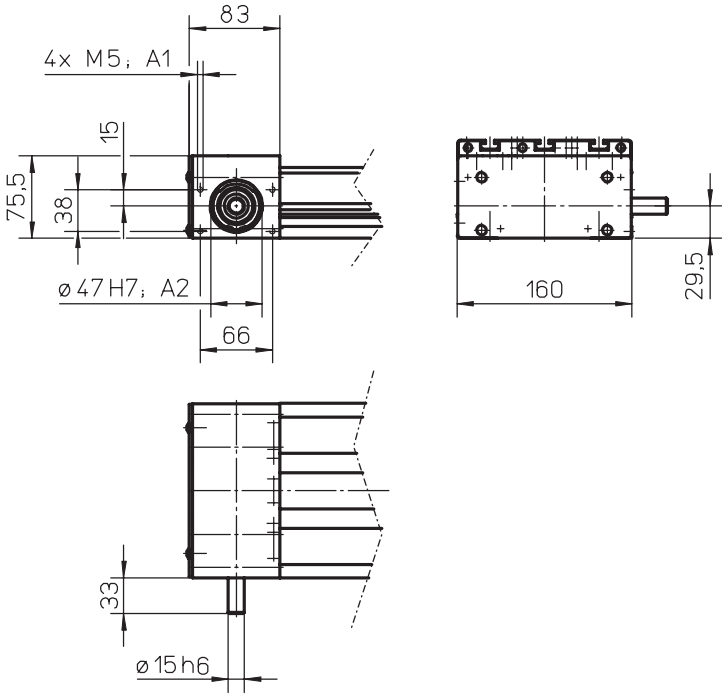


A1: depth 10
A2: depth 4

## WHZ50

» Ordering key - see page 191
» Technical data - see page 112

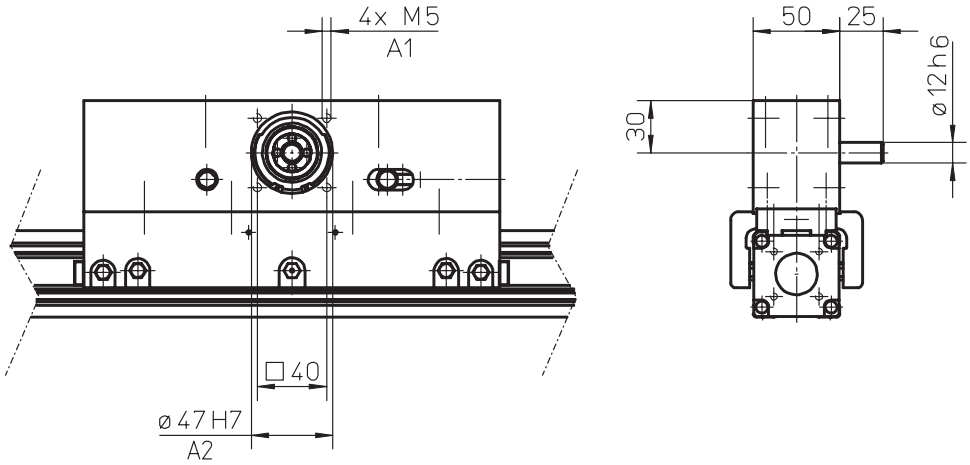


A1: depth 12
A2: depth 3,5

# Accessories

## Non-RediMount Linear Motion Systems

| Dimensions | Projection | Online Sizing & Selection! |
|---|---|---|
| METRIC | | www.LinearMotioneering.com |

## WHZ80

» Ordering key - see page 191
» Technical data - see page 114

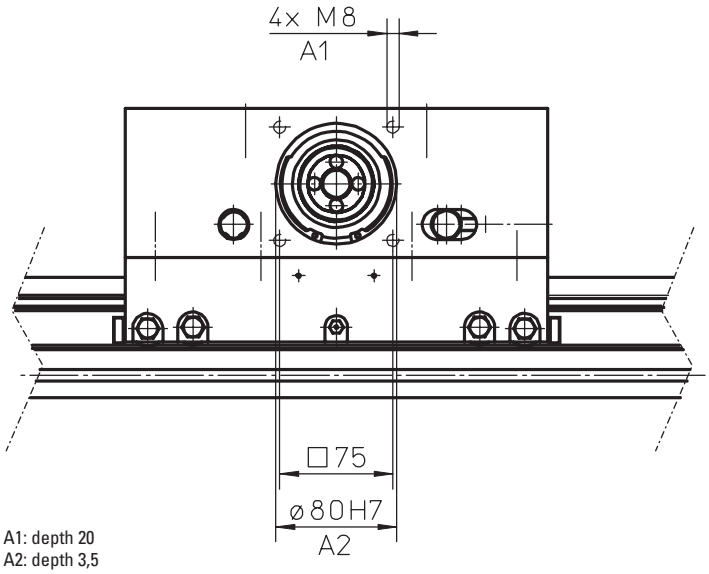


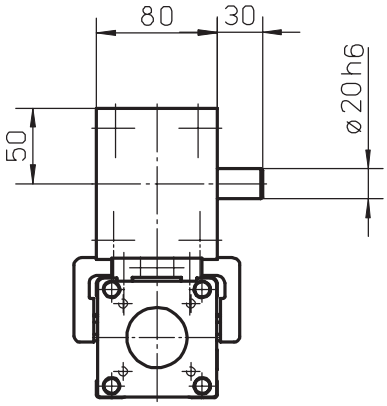


A1: depth 20
A2: depth 3,5

# Additional Technical Data

## Linear Motion Systems with Lead or Ball Screw Drive and Ball Guides

### Technical Data

| Parameter | | WM40S | WM40D | WM60D | WM60S | WM60X | WM80D | WM80S | WM120D |
|---|---|---|---|---|---|---|---|---|---|
| Geometrical moment of inertia of the profile (Iy) | [mm⁴] | $10,8 \times 10^4$ | $10,8 \times 10^4$ | $5,8 \times 10^5$ | $5,8 \times 10^5$ | $5,8 \times 10^5$ | $1,85 \times 10^6$ | $1,85 \times 10^6$ | $7,7 \times 10^6$ |
| Geometrical moment of inertia of the profile (Iz) | [mm⁴] | $13,4 \times 10^4$ | $13,4 \times 10^4$ | $5,9 \times 10^5$ | $5,9 \times 10^5$ | $5,9 \times 10^5$ | $1,94 \times 10^6$ | $1,94 \times 10^6$ | $9,4 \times 10^6$ |
| Friction factor of the guide system (μ) | | 0,05 | 0,05 | 0,1 | 0,1 | 0,1 | 0,1 | 0,1 | 0,1 |
| Efficiency of the unit | | 0,8 | 0,8 | 0,8 | 0,8 | 0,8 | 0,8 | 0,8 | 0,8 |
| Bending factor (b) | | 0,0003 | 0,0003 | 0,0003 | 0,0003 | 0,0003 | 0,0003 | 0,0003 | 0,0003 |
| Inertia of ball screw (jsp) | [kgm²/m] | $1,13 \times 10^{-5}$ | $1,13 \times 10^{-5}$ | $8,46 \times 10^{-5}$ | $8,46 \times 10^{-5}$ | $8,46 \times 10^{-5}$ | $2,25 \times 10^{-4}$ | $2,25 \times 10^{-4}$ | $6,34 \times 10^{-4}$ |
| Dynamic load rating of ball screw (Cx) | [N] | | | | | | | | |
| 05 mm lead | | 4400 | 4400 | 10500 | 10500 | 10500 | 12300 | 12300 | 21500 |
| 10 mm lead | | - | - | - | - | - | 13200 | 13200 | 33400 |
| 20 mm lead | | - | - | 11600 | 11600 | - | 13000 | 13000 | 29700 |
| 40 mm lead | | - | - | - | - | - | - | - | 14900 |
| 50 mm lead | | - | - | 8400 | 8400 | - | 15400 | 15400 | - |
| Dynamic load rating of ball guide (Cy) | [N] | 2 × 2650 | 2 × 2650 | 4 × 11495 | 2 × 12964 | 4 × 11495 | 4 × 14356 | 2 × 18723 | 4 × 18723 |
| Dynamic load rating of ball guide (Cz) | [N] | 2 × 3397 | 2 × 3397 | 4 × 10581 | 2 × 11934 | 4 × 10581 | 4 × 13739 | 2 × 17919 | 4 × 17919 |
| Distance between ball guide carriages (Lx) | [mm] | 87 | 136 | 141,7 | - | 141,7 | 154 | - | 186 |
| Distance between ball guide carriages (Ly) | [mm] | - | - | 35 | 35 | 35 | 49,75 | 49,75 | 80,75 |

| Parameter | | WV60 | WV80 | WV120 | MLSM60D | MLSM80D |
|---|---|---|---|---|---|---|
| Geometrical moment of inertia of the profile (Iy) | [mm⁴] | $5,8 \times 10^5$ | $1,85 \times 10^6$ | $7,7 \times 10^6$ | $1,19 \times 10^6$ | $3,77 \times 10^6$ |
| Geometrical moment of inertia of the profile (Iz) | [mm⁴] | $5,9 \times 10^5$ | $1,94 \times 10^6$ | $9,4 \times 10^6$ | $1,08 \times 10^7$ | $4,71 \times 10^7$ |
| Friction factor of the guide system (μ) | | no guides | no guides | no guides | 0,1 | 0,1 |
| Efficiency of the unit | | 0,8 | 0,8 | 0,8 | 0,8 | 0,8 |
| Bending factor (b) | | 0,0003 | 0,0003 | 0,0003 | 0,0003 | 0,0003 |
| Inertia of ball screw (jsp) | [kgm²/m] | $8,46 \times 10^{-5}$ | $2,25 \times 10^{-4}$ | $6,34 \times 10^{-4}$ | $2,25 \times 10^{-4}$ | $6,34 \times 10^{-4}$ |
| Dynamic load rating of ball screw (Cx) | [N] | | | | | |
| 05 mm lead | | 10500 | 12300 | 21500 | 12300 | 21500 |
| 10 mm lead | | - | 13200 | 33400 | 13200 | 33400 |
| 20 mm lead | | 11600 | 13000 | 29700 | 13000 | 29700 |
| 25 mm lead | | - | - | 14900 | - | - |
| 40 mm lead | | 8400 | 15400 | - | - | 14900 |
| 50 mm lead | | | | | 15400 | - |
| Dynamic load rating of ball guide (Cy) | [N] | no guides | no guides | no guides | 4 × 13770 | 4 × 17965 |
| Dynamic load rating of ball guide (Cz) | [N] | no guides | no guides | no guides | 4 × 13770 | 4 × 17965 |
| Distance between ball guide carriages (Lx) | [mm] | no guides | no guides | no guides | 163 | 185 |
| Distance between ball guide carriages (Ly) | [mm] | no guides | no guides | no guides | 105 | 164 |

# Additional Technical Data

## Linear Motion Systems with Ball Screw and Slide Guides

### Technical Data

| Parameter | | M55 | M75 | M100 |
|---|---|---|---|---|
| Geometrical moment of inertia of the profile (Iy) | [mm⁴] | $4,27 \times 10^5$ | $1,9 \times 10^6$ | $5,54 \times 10^6$ |
| Geometrical moment of inertia of the profile (Iz) | [mm⁴] | $3,4 \times 10^5$ | $1,15 \times 10^6$ | $3,86 \times 10^6$ |
| Friction factor of the guide system (μ) | | 0,15 | 0,15 | 0,15 |
| Efficiency | | | | |
| ball nut unit | | 0,8 | 0,8 | 0,8 |
| composite nut unit | | 0,5 | 0,5 | 0,5 |
| Bending factor (b) | | 0,0005 | 0,0005 | 0,0005 |
| Inertia of ball screw (jsp) | [kgm²/m] | $4,1 \times 10^{-5}$ | $1,6 \times 10^{-4}$ | $2,5 \times 10^{-4}$ |
| Dynamic load rating of ball screw (Cx) | [N] | | | |
| 05 mm lead | | 9300 | 10400 | 12500 |
| 05,8 mm lead | | 5420 | - | - |
| 08 mm lead | | - | - | - |
| 10 mm lead | | 15400 | - | 20600 |
| 12,7 mm lead | | - | 17960 | - |
| 20 mm lead | | 1900 | 10400 | - |
| 25 mm lead | | - | - | 11800 |
| 32 mm lead | | 2000 | - | - |

## Linear Motion Systems with Belt Drive and Ball Guides

### Technical Data

| Parameter | | WH40 | WM60Z | WM80Z | M55 | M75 | M100 | MLSM80Z |
|---|---|---|---|---|---|---|---|---|
| Geometrical moment of inertia of the profile (Iy) | [mm⁴] | $12,6 \times 10^4$ | $5,62 \times 10^5$ | $1,85 \times 10^6$ | $4,59 \times 10^5$ | $1,9 \times 10^6$ | $5,54 \times 10^6$ | $3,77 \times 10^6$ |
| Geometrical moment of inertia of the profile (Iz) | [mm⁴] | $15,3 \times 10^4$ | $5,94 \times 10^5$ | $1,94 \times 10^6$ | $3,56 \times 10^5$ | $1,15 \times 10^6$ | $3,86 \times 10^6$ | $4,71 \times 10^7$ |
| Friction factor of the guide system (μ) | | 0,05 | 0,1 | 0,1 | 0,02 | 0,02 | 0,02 | 0,1 |
| Efficiency of the unit | | 0,85 | 0,85 | 0,85 | 0,95 | 0,95 | 0,95 | 0,85 |
| Bending factor (b) | | 0,0005 | 0,0005 | 0,0005 | 0,0005 | 0,0005 | 0,0005 | 0,0005 |
| Specific mass of belt | [kg/m] | 0,032 | 0,074 | 0,14 | 0,09 | 0,16 | 0,31 | 0,517 |
| Inertia of pulleys (Jsyn) | [kgm²] | $8,8 \times 10^{-6}$ | $2,13 \times 10^{-5}$ | $1,12 \times 10^{-4}$ | $1,7 \times 10^{-5}$ | $6,8 \times 10^{-5}$ | $8,5 \times 10^{-5}$ | $5,077 \times 10^{-4}$ |
| Dynamic load rating of ball guide (Cy) | [N] | 2 × 2650 | 2 × 12964 | 4 × 18723 (2 × 18723)[1] | 2 × 2717 | 2 × 8206 | 2 × 13189 | 4 × 17965 |
| Dynamic load rating of ball guide (Cz) | [N] | 2 × 3397 | 2 × 11934 | 4 x 13739 (2 x 17919) | 2 × 3484 | 2 × 15484 | 2 × 24885 | 4 × 17965 |
| Distance between ball guide carriages (Lx) | [mm] | 72 | - | 154 (-) | 78 | 96 | 140 | 185 |
| Distance between ball guide carriages (Ly) | [mm] | - | 35 | 49,75 | - | - | - | 164 |

[1] Value in brackets = for short carriage.

# Additional Technical Data

## Linear Motion Systems with Belt Drive and Slide Guides

### Technical Data

| Parameter | | M50 | M55 | M75 | M100 |
|---|---|---|---|---|---|
| Geometrical moment of inertia of the profile (Iy) | [$mm^4$] | $2,61 \times 10^5$ | $4,59 \times 10^5$ | $1,9 \times 10^6$ | $5,54 \times 10^6$ |
| Geometrical moment of inertia of the profile (Iz) | [$mm^4$] | $2,44 \times 10^5$ | $3,56 \times 10^5$ | $1,15 \times 10^6$ | $3,86 \times 10^6$ |
| Friction factor of the guide system (μ) | | 0,15 | 0,15 | 0,15 | 0,15 |
| Efficiency of the unit | | 0,85 | 0,85 | 0,85 | 0,85 |
| Bending factor (b) | | 0,0005 | 0,0005 | 0,0005 | 0,0005 |
| Specific mass of belt | [kg/m] | 0,086 | 0,09 | 0,16 | 0,31 |
| Inertia of pulleys (Jsyn) | [$kgm^2$] | $3,1 \times 10^{-5}$ | $1,7 \times 10^{-5}$ | $6,8 \times 10^{-5}$ | $8,5 \times 10^{-5}$ |

## Linear Motion Systems with Belt Drive and Wheel Guides

### Technical Data

| Parameter | | WH50 | WH80 | WH120 | MLSH60Z |
|---|---|---|---|---|---|
| Geometrical moment of inertia of the profile (Iy) | [$mm^4$] | $3,3 \times 10^5$ | $1,93 \times 10^6$ | $6,69 \times 10^6$ | $1,29 \times 10^6$ |
| Geometrical moment of inertia of the profile (Iz) | [$mm^4$] | $2,65 \times 10^5$ | $1,8 \times 10^6$ | $6,88 \times 10^6$ | $1,2 \times 10^7$ |
| Friction factor of the guide system (μ) | | 0,1 | 0,1 | 0,1 | 0,1 |
| Efficiency of the unit | | 0,85 | 0,85 | 0,85 | 0,85 |
| Bending factor (b) | | 0,0005 | 0,0005 | 0,0005 | 0,0005 |
| Specific mass of belt | [kg/m] | 0,055 | 0,21 | 0,34 | 0,119 |
| Inertia of pulleys (Jsyn) | [$kgm^2$] | $1,928 \times 10^{-5}$ | $2.473 \times 10^{-4}$ | $1,004 \times 10^{-3}$ | $4,604 \times 10^{-5}$ |
| Dynamic load rating of wheel guide (Cy) | [N] | - | - | - | 4 × 1266 |
| Dynamic load rating of wheel guide (Cz) | [N] | 4 × 1270 | 4 × 3670 | 4 × 16200 | 4 × 1266 |
| Distance between carriage wheels (Lx) | [mm] | 198 | 220 | 180 | 109 |
| Distance between carriage wheels (Ly) | [mm] | 39 | 65 | 97 | 102,5 |

# Additional Technical Data

## Linear Lifting Systems

### Technical Data

| Parameter | | WHZ50 | WHZ80 |
|---|---|---|---|
| Geometrical moment of inertia of the profile (Ix) | [$mm^4$] | - | - |
| Geometrical moment of inertia of the profile (Iy) | [$mm^4$] | $3,3 \times 10^5$ | $1,93 \times 10^6$ |
| Geometrical moment of inertia of the profile (Iz) | [$mm^4$] | $2,65 \times 10^5$ | $1,8 \times 10^6$ |
| Dynamic load rating of ball screw (Fx) | [N] | belt drive | belt drive |
| Dynamic load rating of ball screw (Fz)<br>ball screw ø 25 lead 10 mm<br>ball screw ø 25 lead 25 mm<br>ball screw ø 32 lead 10 mm | [N | | |
| Friction factor of the guide system (μ) | | 0,1 | 0,1 |
| Efficiency of the unit | | 0,85 | 0,85 |
| Specific mass of belt | [kg/m] | 0,055 | 0,119 |
| Inertia of pulleys (Jsyn) | [$kgm^2$] | $6,906 \times 10^{-5}$ | $5,026 \times 10^{-4}$ |
| Inertia of ball screw (jsp)<br>ball screw ø 25 lead 10<br>ball screw ø 25 lead 25<br>ball screw ø 32 lead 10 | [$kgm^2/m$] | <br>-<br>-<br>- | <br>-<br>-<br>- |
| Dynamic load rating of ball guide (Cx) | [N] | - | - |
| Dynamic load rating of ball guide (Cy) | [N] | 4 × 1270 | 4 × 3670 |
| Distance between ball guide carriages (Lx) | [mm] | 198 | 220 |
| Distance between ball guide carriages (Ly) | [mm] | 39 | 65 |
| Distance between ball guide carriages (Lz) | [mm] | - | - |
| Definition of forces | | 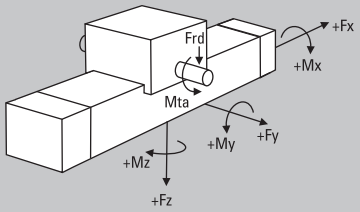 | |

# Ordering Keys

## Linear Motion Systems with Ball Screw Drive and Ball Guides

### WM40S, WM40D, WM60S, WM60D, WM60X, WM80S, WM80D, WM120D

| 1 | 2 | 3 | 4 | 5 | 6 | 7 | 8 | 9 | 10 |
|---|---|---|---|---|---|---|---|---|---|
| WM06D | 20 | LX | ZZ6 | -02545 | -03715 | A | Z | 0520 | S1 |

**1. Type of unit**
WM04S = WM40S unit with single ball nut
WM04D = WM40D unit with double ball nuts
WM06S = WM60S unit with single ball nut
WM06D = WM60D unit with double ball nuts
WM06X = WM60X unit with left/right screw
WM08S = WM80S unit with single ball nut
WM08D = WM80D unit with double ball nuts
WM12D = WM120D unit with double ball nuts

**2. Screw lead[1]**
05 = 5 mm
10 = 10 mm
20 = 20 mm
40 = 40 mm
50 = 50 mm

**3. Transmission type**
LX = inline style, directly coupled, RediMount flange
SX = inline style, directly coupled, no RediMount flange

**4. RediMount motor ID code**
vvw = alphanumeric motor code for suitable RediMount flange when motor is known
999 = RediMount code used when motor is unknown
XXX = for units without RediMount flange

**5. Maximum stroke (Smax)**
- xxxxx = distance in mm

**6. Total length of unit (L tot)**
- yyyyy = distance in mm

**7. Drive shaft / RediMount configuration[2]**
A = single shaft without key way
C = single shaft with key way or RediMount
G = double shafts, first without key way and second for encoder
I = double shafts, first with key way or RediMount and second for encoder[3]

**8. Carriage configuration[4]**
N = single standard carriage
S = single short carriage
L = single long carriage
Z = double standard carriages
Y = double short carriages
M = double long carriages

**9. Distance between double carriages (Lc)**
0000 = always for single carriages
zzzz = distance in mm

**10. Protection option[5]**
S1 = wash down protection (not available for WM04 units)

[1] See table below for available combinations of units and ball screw leads.

| Type of unit | Available screw leads [mm] | | | | |
|---|---|---|---|---|---|
| | 5 | 10 | 20 | 40 | 50 |
| WM04S | x | | | | |
| WM04D | x | | | | |
| WM06S | x | | x | | x |
| WM06D | x | | x | | x |
| WM06X | x | | | | |
| WM08S | x | x | x | | x |
| WM08D | x | x | x | | x |
| WM12D | x | x | x | x | |

[2] See below for the definition of shafts.

Single and double shafts with RediMount

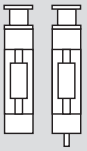

Single and double shafts without RediMount

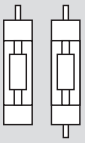

[3] Drive shaft configuration I not available for WM 40.

[4] See table below for available combinations of units and carriage types.

| Type of unit | Available carriage types | | | | | |
|---|---|---|---|---|---|---|
| | N | S | L | Z | Y | M |
| WM04S | x | | | x | | |
| WM04D | | | x | | | x |
| WM06S | | x | | | x | |
| WM06D | x | | x | x | | |
| WM06X | x | x | x | | | |
| WM08S | | x | | | x | |
| WM08D | x | | x | x | | |
| WM12D | x | | x | x | | |

[5] Leave position blank if no additional protection is required.

Note! for ordering of options type EN, ES, KRG, RT, ADG and MGK, see accessory index on page 131.

# Ordering Keys

## Linear Motion Systems with Ball Screw Drive and No Guides

### WV60, WV80, WV120

| 1 | 2 | 3 | 4 | 5 | 6 | 7 | 8 | 9 | 10 |
|---|---|---|---|---|---|---|---|---|---|
| WV08D | 20 | SX | XXX | -02745 | -03295 | G | N | 0000 | |

**1. Type of unit**
WV06D = WV60 unit
WV08D = WV80 unit
WV12D = WV120 unit

**2. Ball screw lead[1]**
05 = 5 mm
10 = 10 mm
20 = 20 mm
40 = 40 mm
50 = 50 mm

**3. Transmission type**
LX = inline style, directly coupled, RediMount flange
SX = inline style, directly coupled, no RediMount flange

**4. RediMount motor ID code**
vvw = alphanumeric motor code for suitable RediMount flange when motor is known
999 = RediMount code used when motor is unknown
XXX = for units without RediMount flange

**5. Maximum stroke (Smax)**
- xxxxx = distance in mm

**6. Total length of unit (L tot)**
- yyyyy = distance in mm

**7. Drive shaft / RediMount configuration[2]**
A = single shaft without key way
C = single shaft with key way or RediMount
G = double shafts, first without key way and second for encoder
I = double shafts, first with key way or RediMount and second for encoder[3]

**8. Carriage configuration**
N = single standard carriage

**9. Distance between double carriages (Lc)**
0000 = always for single carriages

**10. Protection option[3]**
S1 = wash down protection

[1] See table below for available combinations of units and ball screw leads.

| Type of unit | Available screw leads [mm] | | | | |
|---|---|---|---|---|---|
| | 5 | 10 | 20 | 40 | 50 |
| WV06D | x | | x | | x |
| WV08D | x | x | x | | x |
| WV12D | x | x | x | x | |

[2] See below for the definition of shafts.

Single and double shafts with RediMount

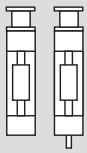

Single and double shafts without RediMount

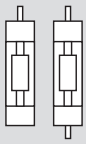

[3] Leave position blank if no additional protection is required.

Note! for ordering of options type EN, ES, KRG, RT, ADG and MGK, see accessory index on page 131.

# Ordering Keys

## Linear Motion Systems with Lead or Ball Screw Drive and Ball Guides

### MLSM60D, MLSM80D

| 1 | 2 | 3 | 4 | 5 | 6 | 7 | 8 | 9 |
|---|---|---|---|---|---|---|---|---|
| MLSM06D | 20 | LX | PP1 | -03800 | -04645 | C | L | 0000 |

**1. Type of unit**
MLSM06D = MLSM60 unit
MLSM08D = MLSM80 unit

**2. Ball screw lead**
05 = 5 mm
10 = 10 mm
20 = 20 mm
40 = 40 mm
50 = 50 mm

**3. Transmission type**
LX = inline style, directly coupled, RediMount flange
SX = inline style, directly coupled, no RediMount flange

**4. RediMount motor ID code**
vvw = alphanumeric motor code for suitable RediMount flange when motor is known
999 = RediMount code used when motor is unknown
XXX = for units without RediMount flange

**5. Maximum stroke (Smax)**
- xxxxx = distance in mm

**6. Total length of unit (L tot)**
- yyyyy = distance in mm

**7. Drive shaft / RediMount configuration[2]**
A = single shaft without key way
C = single shaft with key way or RediMount
G = double shafts, first without key way and second for encoder
I = double shafts, first with key way or RediMount and second for encoder[3]

**8. Carriage configuration**
N = single standard carriage
L = single long carriage
Z = double standard carriages

**9. Distance between double carriages (Lc)**
0000 = always for single carriages
zzzz = distance in mm

[1] See table below for available combinations of units and ball screw leads.

| Type of unit | Available screw leads [mm] | | | | |
|---|---|---|---|---|---|
| | 5 | 10 | 20 | 40 | 50 |
| MLSM06D | x | | x | | x |
| MLSM08D | x | x | x | x | |

[2] See below for the definition of shafts.

Single and double shafts with RediMount

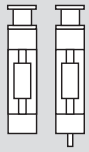

Single and double shafts without RediMount

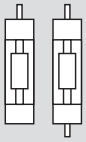

# Ordering Keys

## Linear Motion Systems with Ball Screw Drive and Ball Guides

### M55, M75, M100

| 1 | 2 | 3 | 4 | 5 | 6 | 7 | 8 | 9 | 10 |
|---|---|---|---|---|---|---|---|---|---|
| MF07S | 05 | LX | MC8 | -01000 | -01500 | X | N | 0000 | S1 |

**1. Type of unit**
MF06S = M55 unit, ball guides, ball screw
MF07S = M75 unit, ball guides, ball screw
MF10S = M100 unit, ball guides, ball screw

**2. Screw lead and tolerance class[1]**
05 = 5 mm
10 = 10 mm
12 = 12,7 mm
20 = 20 mm
25 = 25 mm

**3. Transmission type**
LX = inline style, directly coupled, RediMount flange
SX = inline style, directly coupled, no RediMount flange

**4. RediMount motor ID code**
vvw = alphanumeric motor code for suitable RediMount flange when motor is known
999 = RediMount code used when motor is unknown
XXX = for units without RediMount flange

**5. Maximum stroke (Smax)**
- xxxxx = distance in mm

**6. Total length of unit (L tot)**
- yyyyy = distance in mm

**7. Screw supports**
X = no screw supports
S = single screw supports
D = double screw supports

**8. Carriage configuration**
N = single standard carriage
Z = double standard carriages

**9. Distance between carriages (Lc)**
0000 = for all single standard carriage units
zzzz = distance in mm between carriages

**10. Protection option[2]**
S1 = wash down protection

[1] See table below for available combinations of units and ball screw type, lead and tolerance.

| Ball screw type | Type of unit | | |
|---|---|---|---|
| | M55 | M75 | M100 |
| 05 | x | x | x |
| 10 | x | | x |
| 12 | | x | |
| 20 | x | x | |
| 25 | | | x |

[2] Leave position blank if no additional protection is required.

# Ordering Keys

## Linear Motion Systems with Lead or Ball Screw Drive and Ball Guides

### 2HB10, 2HB20

| 1 | 2 | 3 | 4 | 5 | 6 | 7 | 8 | 9 | 10 | 11 |
|---|---|---|---|---|---|---|---|---|---|---|
| 2HB10 | H0 | N1285 | -038 | N | 001 | A | 0 | A | 0 | 0 |

**1. Type of unit**
2HB10 = 2HB10 unit
2HB20 = 2HB20 unit

**2. Ball screw diameter, lead and nut type**
G0 = 16 mm, 5 mm, preloaded (2HB10 only)
H0 = 16 mm, 10 mm, preloaded (2HB10 only)

L0 = 25 mm, 5 mm, preloaded (2HB20 only)
M0 = 25 mm, 10 mm, preloaded( 2HB20 only)
N0 = 25 mm, 25 mm, preloaded (2HB20 only)

**3. Ordering length (L)**
N xxxxx = distance in mm

**4. Y-distance**
- 038 = standard distance in mm between motor end plate to first set of mounting holes on 2HB10
- 043 = standard distance in mm between motor end plate to first set of mounting holes on 2HB20
- yyy = custom distance in mm between motor end plate to first set of mounting holes

**5. Brake option**
N = no brake
B = brake

**6. RediMount motor ID code**
001 = NEMA 23
002 = NEMA 34
zzz = consult www.LinearMotioneering.com for complete list of available standard RediMount motor flanges

**7. Ball guide rail coating option**
A = standard
D = Duralloy

**8. Ball guide carriage coating option**
0 = standard
1 = Duralloy

**9. Profile cover option**
A = none
B = bellows (bellows will reduce stroke length app. 28%)
C = shrouds

**10. Hardware option**
0 = alloy plated
1 = stainless steel

**11. Home and end of stroke sensor option**
0 = no sensors
1 = home sensor, NPN type
2 = end of stroke sensors, NPN type
3 = home and end of stroke sensors, NPN type
4 = home sensor, PNP type
5 = end of stroke sensors, PNP type
6 = home and end of stroke sensors, PNP type

# Ordering Keys

## Linear Motion Systems with Lead or Ball Screw Drive and Ball Guides

### 2RB12, 2RB16

| 1 | 2 | 3 | 4 | 5 | 6 | 7 | 8 | 9 | 10 | 11 |
|---|---|---|---|---|---|---|---|---|---|---|
| 2RB12 | J0 | N1000 | -100 | N | 002 | B | 0 | A | 0 | 0 |

**1. Type of unit**
2RB12 = 2RB12 unit
2RB16 = 2RB16 unit

**2. Ball screw diameter, lead and nut type**
G0 = 16 mm, 5 mm, preloaded (2RB12 only)
H0 = 16 mm, 10 mm, preloaded (2RB12 only)

I0 = 20 mm, 5 mm, preloaded (2RB16 only)
J0 = 20 mm, 10 mm, preloaded ( 2RB16 only)
K0 = 20 mm, 25 mm, preloaded (2RB16 only)

**3. Ordering length (L)**
N xxxx = distance in mm

**4. Y-distance**
- 075 = standard distance in mm between motor end plate to first set of mounting holes on 2RB12
- 100 = standard distance in mm between motor end plate to first set of mounting holes on 2RB16
- yyy = custom distance in mm between motor end plate to first set of mounting holes

**5. Brake option**
N = no brake
B = brake

**6. RediMount motor ID code**
001 = NEMA 23
002 = NEMA 34
zzz = consult www.LinearMotioneering.com for complete list of available standard RediMount motor flanges

**7. Ball guide shaft coating option**
A = standard, 60 Case
B = stainless steel (440C)
C = chrome plated
E = armoloy

**8. Bearing option**
0 = standard
1 = corrosion resistance

**9. Profile cover option**
A = none
B = bellows (bellows will reduce stroke length app. 28%)

**10. Hardware option**
0 = alloy plated
1 = stainless steel

**11. Home and end of stroke sensor option**
0 = no sensors
1 = home sensor, NPN type
2 = end of stroke sensors, NPN type
3 = home and end of stroke sensors, NPN type
4 = home sensor, PNP type
5 = end of stroke sensors, PNP type
6 = home and end of stroke sensors, PNP type

# Ordering Keys

## Linear Motion Systems with Lead or Ball Screw Drive and Ball Guides

### 2DB08, 2DB12, 2DB16

| 1 | 2 | 3 | 4 | 5 | 6 | 7 | 8 | 9 | 10 | 11 |
|---|---|---|---|---|---|---|---|---|---|---|
| 2DB12 | F0 | N0250 | -300 | N | 002 | A | 0 | A | 0 | 0 |

**1. Type of unit**
2DB08 = 2DB08 unit
2DB12 = 2DB12 unit
2DB16 = 2DB16 unit

**2. Screw type, diameter, lead and nut type**
A0 = leadscrew, 0.375 in, 0.100 in, preloaded (2DB08 only)
B0 = leadscrew, 0.375 in, 0.250 in, preloaded (2DB08 only)
C0 = leadscrew, 0.375 in, 0.500 in, preloaded (2DB08 only)
D0 = leadscrew, 0.375 in, 0.750 in, preloaded (2DB08 only)
E0 = leadscrew, 0.375 in, 1.000 in, preloaded (2DB08 only)

F0 = ballscrew, 0.631 in, 0.200 in, non-preloaded (2DB12 only)
V0 = ballscrew, 0.631 in, 0.200 in, preloaded (2DB12 only)
QJ = ballscrew, 0.500 in, 0.500 in, preloaded (2DB12 only)

G0 = ballscrew, 0.750 in, 0.200 in, non-preloaded (2DB16 only)
W0 = ballscrew, 0.750 in, 0.200 in, preloaded (2DB16 only)
RJ = ballscrew, 0.750 in, 0.500 in, preloaded (2DB16 only)
LJ = ballscrew, 0.631 in, 1.0 in, preloaded (2DB16 only)
D0 = ballscrew, 20 mm, 5 mm, preloaded (2DB16 only)

**3. Ordering length (L)**
N xxxx = distance in inch (e.g. 0250 = 25 inch)

**4. Y-distance**
- 200 = standard distance in inch between motor end plate to first set of mounting holes for 2DB08 (e.g. 200 = 2 in)
- 300 = standard distance in inch between motor end plate to first set of mounting holes for 2DB12 and 2DB16 (e.g. 300 = 3 in)
- yyy = custom distance in inch between motor end plate to first set of mounting holes

**5. Brake option**
N = no brake
B = brake

**6. RediMount motor ID code**
001 = NEMA 23
002 = NEMA 34
zzz = consult www.LinearMotioneering.com for complete list of available standard RediMount motor flanges

**7. Ball guide shaft coating option**
A = standard, 60 Case
B = stainless steel (440C)
C = chrome plated
E = Armoloy

**8. Bearing option**
0 = standard
1 = corrosion resistance

**9. Profile cover option**
A = none
B = bellows (bellows will reduce stroke length app. 28%)

**10. Hardware option**
0 = alloy plated
1 = stainless steel

**11. Home and end of stroke sensor option**
0 = no sensors
7 = home
8 = ends of travel
9 = both

# Ordering Keys

## Linear Motion Systems with Ball Screw Drive and Slide Guides

### M55, M75, M100

| 1 | 2 | 3 | 4 | 5 | 6 | 7 | 8 | 9 | 10 |
|---|---|---|---|---|---|---|---|---|---|
| MG07S | 05 | LX | PP2 | -01000 | -01500 | X | N | 0000 | S1 |

**1. Type of unit**
MG06S = M55 unit, slide guides, ball screw
MG07S = M75 unit, slide guides, ball screw
MG10S = M100 unit, slide guides, ball screw

**2. Screw lead and tolerance class[1]**
05 = 5 mm
10 = 10 mm
12 = 12,7 mm
20 = 20 mm
25 = 25 mm

**3. Transmission type**
LX = inline style, directly coupled, RediMount flange
SX = inline style, directly coupled, no RediMount flange

**4. RediMount motor ID code**
vvw = alphanumeric motor code for suitable RediMount flange when motor is known
999 = RediMount code used when motor is unknown
XXX = for units without RediMount flange

**5. Maximum stroke (Smax)**
- xxxxx = distance in mm

**6. Total length of unit (L tot)**
- yyyyy = distance in mm

**7. Screw supports**
X = no screw supports
S = single screw supports
D = double screw supports

**8. Carriage configuration**
N = single standard carriage
Z = double standard carriages

**9. Distance between carriages (Lc)**
0000 = for all single standard carriage units
zzzz = distance in mm between carriages

**10. Protection option[2]**
S1 = wash down protection

[1] See table below for available combinations of units and ball screw type, lead and tolerance.

| Ball screw type | Type of unit | | |
|---|---|---|---|
| | M55 | M75 | M100 |
| 05 | x | x | x |
| 10 | x | | x |
| 12 | | x | |
| 20 | x | x | |
| 25 | | | x |

[2] Leave position blank if no additional protection is required.

# Ordering Keys

## Linear Motion Systems with Belt Drive and Ball Guides

### WH40

| 1 | 2 | 3 | 4 | 5 | 6 | 7 | 8 |
|---|---|---|---|---|---|---|---|
| WH04Z | LX | FB7 | -01400 | -01755 | H | L | 0400 |

**1. Type of unit**
WH04Z = WH40 unit

**2. Transmission type**
LX = inline style, directly coupled, RediMount flange
SX = inline style, directly coupled, no RediMount flange

**3. RediMount motor ID code**
vvw = alphanumeric motor code for suitable RediMount flange when motor is known
999 = RediMount code used when motor is unknown
XXX = for units without RediMount flange

**4. Maximum stroke (Smax)**
- xxxxx = distance in mm

**5. Total length of unit (L tot)**
- yyyyy= distance in mm

**6. Drive shaft / RediMount flange configuration[1]**
A = shaft on left side without key way
B = shaft on right side without key way
C = shaft on left side with key way or RediMount
D = shaft on right side with key way or RediMount
E = shaft on left side without key way, shaft on right side with key way or RediMount
F = shaft on left side with key way or RediMount, shaft on right side without key way
G = shaft on left side without key way, shaft on right side for encoder
H = shaft on left side for encoder, shaft on right side without key way
I = shaft on left side with key way or RediMount, shaft on right side for encoder
J = shaft on left side for encoder, shaft on right side with key way or RediMount
L = shaft on left and right side without key way
M = shaft on left side with key way or RediMount, shaft on right side with key way
N = shaft on left side with key way, shaft on right side with key way or RediMount
W = hollow shaft on both sides with clamping unit

**7. Carriage configuration**
N = single standard carriage
L = single long carriage
Z = double standard carriages

**8. Distance between double carriages (Lc)**
0000 = always for single carriages
zzzz = distance in mm

[1] See below for the definition of shafts.

Left, right or both sides with shafts with RediMount

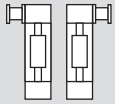

Left or right with RediMount and other side a shaft without RediMount

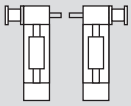

Left or right without RediMount

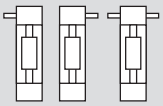

Note! for ordering of options type EN, ES, KRG, RT, ADG and MGK, see accessory index on page 131.

# Ordering Keys

## Linear Motion Systems with Belt Drive and Ball Guides

### WM60Z, WM80Z

| 1 | 2 | 3 | 4 | 5 | 6 | 7 | 8 |
|---|---|---|---|---|---|---|---|
| WM06Z | LX | AG5 | -01400 | -01755 | H | L | 0400 |

**1. Type of unit**
WM06Z = WM60Z unit
WM08Z = WM80Z unit

**2. Transmission type**
LX = inline style, directly coupled, RediMount flange
SX = inline style, directly coupled, no RediMount flange

**3. RediMount motor ID code**
vvw = alphanumeric motor code for suitable RediMount flange when motor is known
999 = RediMount code used when motor is unknown
XXX = for units without RediMount flange

**4. Maximum stroke (Smax)**
- xxxxx = distance in mm

**5. Total length of unit (L tot)**
- yyyyy= distance in mm

**6. Drive shaft / RediMount flange configuration[1]**
A = shaft on left side without key way
B = shaft on right side without key way
C = shaft on left side with key way or RediMount
D = shaft on right side with key way or RediMount
E = shaft on left side without key way, shaft on right side with key way or RediMount
F = shaft on left side with key way or RediMount, shaft on right side without key way
G = shaft on left side without key way, shaft on right side for encoder
H = shaft on left side for encoder, shaft on right side without key way
I = shaft on left side with key way or RediMount, shaft on right side for encoder
J = shaft on left side for encoder, shaft on right side with key way or RediMount
L = shaft on left and right side without key way
M = shaft on left side with key way or RediMount, shaft on right side with key way
N = shaft on left side with key way, shaft on right side with key way or RediMount
W = hollow shaft on both sides with clamping unit

**7. Carriage configuration[2]**
N = single standard carriage
S = single short carriage
L = single long carriage
Z = double standard carriages
Y = double short carriages

**8. Distance between double carriages (Lc)**
0000 = always for single carriages
zzzz = distance in mm

[1] See below for the definition of shafts.

Left, right or both sides with shafts with RediMount

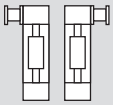

Left or right with RediMount and other side a shaft without RediMount

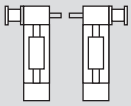

Left or right without RediMount

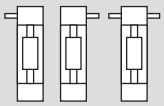

[2] See table below for available combinations of units and carriage types.

| Type of unit | Available carriage types | | | | |
|---|---|---|---|---|---|
| | N | S | L | Z | Y |
| WM06Z | | x | | | x |
| WM08Z | x | x | x | x | x |

Note! for ordering of options type EN, ES, KRG, RT, ADG and MGK, see accessory index on page 131.

# Ordering Keys

## Linear Motion Systems with Belt Drive and Ball Guides

### M55, M75, M100

| 1 | 2 | 3 | 4 | 5 | 6 | 7 | 8 | 9 |
|---|---|---|---|---|---|---|---|---|
| MF10B | LX | 999 | -01000 | -01500 | D | N | 0000 | S1 |

**1. Type of unit**
MF06B = M55 unit, ball guides, belt drive
MF07B = M75 unit, ball guides, belt drive
MF10B = M100 unit, ball guides, belt drive

**2. Transmission type**
LX = inline style, directly coupled, RediMount flange
SX = inline style, directly coupled, no RediMount flange

**3. RediMount motor ID code**
vvw = alphanumeric motor code for suitable RediMount flange when motor is known
999 = RediMount code used when motor is unknown
XXX = for units without RediMount flange

**4. Maximum stroke (Smax)**
- xxxxx = distance in mm

**5. Total length of unit (L tot)**
- yyyyy = distance in mm

**6. Drive shaft / RediMount flange configuration[1]**
C = shaft on left side with key way or RediMount
D = shaft on right side with key way or RediMount
M = shaft on left side with key way or RediMount, shaft on right side with key way
N = shaft on left side with key way, shaft on right side with key way or RediMount

**7. Carriage configuration**
N = single standard carriage
Z = double standard carriages

**8. Distance between carriages (Lc)**
0000 = for all single standard carriage units
zzzz = distance in mm between carriages

**9. Protection option**
S1 = wash down protection (blank if no protection option required).

[1] See below for the definition of shafts.

Left, right or both sides with shafts with RediMount

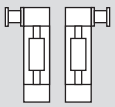

Left or right with RediMount and other side a shaft without RediMount

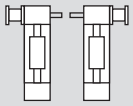

Left or right without RediMount

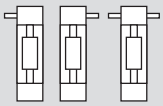

# Ordering Keys

## Linear Motion Systems with Belt Drive and Ball Guides

### MLSM80Z

| 1 | 2 | 3 | 4 | 5 | 6 | 7 | 8 |
|---|---|---|---|---|---|---|---|
| MLSM08Z | SX | XXX | -03800 | -04645 | C | L | 0000 |

**1. Type of unit**
MLSM08Z = MLSM80 unit

**2. Transmission type**
LX = inline style, directly coupled, RediMount flange
SX = inline style, directly coupled, no RediMount flange

**3. RediMount motor ID code**
vvw = alphanumeric motor code for suitable RediMount flange when motor is known
999 = RediMount code used when motor is unknown
XXX = for units without RediMount flange

**4. Maximum stroke (Smax)**
- xxxxx = distance in mm

**5. Total length of unit (L tot)**
- yyyyy = distance in mm

**6. Drive shaft / RediMount flange configuration[1]**
A = shaft on left side without key way
B = shaft on right side without key way
C = shaft on left side with key way or RediMount
D = shaft on right side with key way or RediMount
E = shaft on left side without key way, shaft on right side with key way or RediMount
F = shaft on left side with key way or RediMount, shaft on right side without key way
G = shaft on left side without key way, shaft on right side for encoder
H = shaft on left side for encoder, shaft on right side without key way
I = shaft on left side with key way or RediMount, shaft on right side for encoder
J = shaft on left side for encoder, shaft on right side with key way or RediMount
L = shaft on left and right side without key way
M = shaft on left side with key way or RediMount, shaft on right side with key way
N = shaft on left side with key way, shaft on right side with key way or RediMount
W = hollow shaft on both sides with clamping unit

**7. Carriage configuration**
N = single standard carriage
L = single long carriage
Z = double standard carriages

**8. Distance between double carriages**
0000 = always for single carriages
zzzz = distance in mm

[1] See below for the definition of shafts.

Left, right or both sides with shafts with RediMount

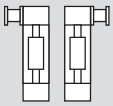

Left or right with RediMount and other side a shaft without RediMount

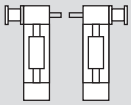

Left or right without RediMount

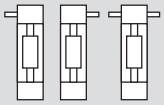

# Ordering Keys

## Linear Motion Systems with Belt Drive and Slide Guides

### M50, M55, M75, M100

| 1 | 2 | 3 | 4 | 5 | 6 | 7 | 8 | 9 |
|---|---|---|---|---|---|---|---|---|
| MG07B | LX | DE5 | -01000 | -01500 | D | N | 0000 | S1 |

**1. Type of unit**
MG05B = M50 unit, slide guides, belt drive
MG06B = M55 unit, slide guides, belt drive
MG07B = M75 unit, slide guides, belt drive
MG10B = M100 unit, slide guides, belt drive

**2. Transmission type**
LX = inline style, directly coupled, RediMount flange
SX = inline style, directly coupled, no RediMount flange

**3. RediMount motor ID code**
vvw = alphanumeric motor code for suitable RediMount flange when motor is known
999 = RediMount code used when motor is unknown
XXX = for units without RediMount flange

**4. Maximum stroke (Smax)**
- xxxxx = distance in mm

**5. Total length of unit (L tot)**
- yyyyy = distance in mm

**6. Drive shaft / RediMount flange configuration[1]**
C = shaft on left side with key way or RediMount
D = shaft on right side with key way or RediMount
M = shaft on left side with key way or RediMount, shaft on right side with key way
N = shaft on left side with key way, shaft on right side with key way or RediMount

**7. Carriage configuration**
N = single standard carriage
Z = double standard carriages (not possible for MG05B)

**8. Distance between carriages (Lc)**
0000 = for all single standard carriage units
zzzz = distance in mm between carriages (not possible for MG05B)

**9. Protection option[2]**
S1 = wash down protection (not possible for MG05B)
S2 = enhanced wash down protection (not possible for MG05B)

[1] See below for the definition of shafts.

Left, right or both sides with shafts with RediMount

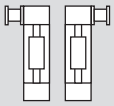

Left or right with RediMount and other side a shaft without RediMount

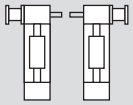

Left or right without RediMount

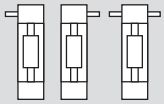

[2] Leave position blank if no additional protection is required.

# Ordering Keys

## Linear Motion Systems with Belt Drive and Wheel Guides

### WH50, WH80, WH120

| 1 | 2 | 3 | 4 | 5 | 6 | 7 | 8 | 9 |
|---|---|---|---|---|---|---|---|---|
| WH08Z | LX | BT8 | -02300 | -02710 | N | L | 0000 | S2 |

**1. Type of unit**
WH05Z = WH50 unit
WH08Z = WH80 unit
WH12Z = WH120 unit

**2. Transmission type**
LX = inline style, directly coupled, RediMount flange
SX = inline style, directly coupled, no RediMount flange

**3. RediMount motor ID code**
vvw = alphanumeric motor code for suitable RediMount flange when motor is known
999 = RediMount code used when motor is unknown
XXX = for units without RediMount flange

**4. Maximum stroke (Smax)**
- xxxxx = distance in mm

**5. Total length of unit (L tot)**
- yyyyy = distance in mm

**6. Drive shaft / RediMount flange configuration[1]**
A = shaft on left side without key way
B = shaft on right side without key way
C = shaft on left side with key way or RediMount
D = shaft on right side with key way or RediMount
E = shaft on left side without key way, shaft on right side with key way or RediMount
F = shaft on left side with key way or RediMount, shaft on right side without key way
G = shaft on left side without key way, shaft on right side for encoder
H = shaft on left side for encoder, shaft on right side without key way
I = shaft on left side with key way or RediMount, shaft on right side for encoder
J = shaft on left side for encoder, shaft on right side with key way or RediMount
K = hollow shaft on both sides without clamping unit
L = shaft on left and right side without key way
M = shaft on left side with key way or RediMount, shaft on right side with key way
N = shaft on left side with key way, shaft on right side with key way or RediMount
V = hollow shaft on both sides for Micron DT/DTR planetary gear option
W = hollow shaft on both sides with clamping unit

**7. Carriage configuration**
N = single standard carriage
L = single long carriage
Z = double standard carriages

**8. Distance between double carriages**
0000 = always for single carriages
zzzz = distance in mm

**9. Protection option[2]**
S1 = wash down protection
S2 = enhanced wash down protection

[1] See below for the definition of shafts.

Left, right or both sides with shafts with RediMount

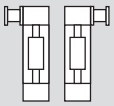

Left or right with RediMount and other side a shaft without RediMount

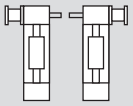

Left or right without RediMount

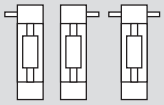

[2] Leave position blank if no additional protection is required.

Note! for ordering of options type EN, ES, KRG, RT, ADG and MGK, see accessory index on page 131.

# Ordering Keys

## Linear Motion Systems with Belt Drive and Wheel Guides

### MLSH60Z

| 1 | 2 | 3 | 4 | 5 | 6 | 7 | 8 |
|---|---|---|---|---|---|---|---|
| MLSH06Z | SX | XXX | -04500 | -05580 | D | D | 0600 |

**1. Type of unit**
MLSH06Z = MLSH60 unit

**2. Transmission type**
LX = inline style, directly coupled, RediMount flange
SX = inline style, directly coupled, no RediMount flange

**3. RediMount motor ID code**
vvw = alphanumeric motor code for suitable RediMount flange when motor is known
999 = RediMount code used when motor is unknown
XXX = for units without RediMount flange

**4. Maximum stroke (Smax)**
- xxxxx = distance in mm

**5. Total length of unit (L tot)**
- yyyyy = distance in mm

**6. Drive shaft / RediMount flange configuration[1]**
A = shaft on left side without key way
B = shaft on right side without key way
C = shaft on left side with key way or RediMount
D = shaft on right side with key way or RediMount
E = shaft on left side without key way, shaft on right side with key way or RediMount
F = shaft on left side with key way or RediMount, shaft on right side without key way
G = shaft on left side without key way, shaft on right side for encoder
H = shaft on left side for encoder, shaft on right side without key way
I = shaft on left side with key way or RediMount, shaft on right side for encoder
J = shaft on left side for encoder, shaft on right side with key way or RediMount
L = shaft on left and right side without key way
M = shaft on left side with key way or RediMount, shaft on right side with key way
N = shaft on left side with key way, shaft on right side with key way or RediMount

**7. Carriage configuration**
N = single standard carriage
L = single long carriage
Z = double standard carriages

**8. Distance between double carriages**
0000 = always for single carriages
zzzz = distance in mm

[1] See below for the definition of shafts.

Left, right or both sides with shafts with RediMount

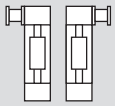

Left or right with RediMount and other side a shaft without RediMount

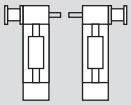

Left or right without RediMount

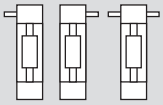

# Ordering Keys

## Linear Lifting Units

### WHZ50, WHZ80

| 1 | 2 | 3 | 4 | 5 | 6 | 7 | 8 | 9 |
|---|---|---|---|---|---|---|---|---|
| WHZ05Z | LX | KB5 | -01000 | -01410 | A | N | 0000 | |

**1. Type of unit**
WHZ05Z = WHZ50 unit
WHZ08Z = WHZ80 unit

**2. Transmission type**
LX = inline style, directly coupled, RediMount flange
SX = inline style, directly coupled, no RediMount flange

**3. RediMount motor ID code**
vvw = alphanumeric motor code for suitable RediMount flange when motor is known
999 = RediMount code used when motor is unknown
XXX = for units without RediMount flange

**4. Maximum stroke (Smax)**
- xxxxx = distance in mm

**5. Total length of unit (L tot)**
- yyyyy = distance in mm

Note! for ordering of options type EN, ES, KRG, RT, ADG and MGK, see accessory index on page 131.

**6. Drive shaft / RediMount flange configuration[1]**
A = shaft on left side without key way
B = shaft on right side without key way
C = shaft on left side with key way or RediMount
D = shaft on right side with key way or RediMount
E = shaft on left side without key way, shaft on right side with key way or RediMount
F = shaft on left side with key way or RediMount, shaft on right side without key way
G = shaft on left side without key way, shaft on right side for encoder
H = shaft on left side for encoder, shaft on right side without key way
I = shaft on left side with key way or RediMount, shaft on right side for encoder
J = shaft on left side for encoder, shaft on right side with key way or RediMount
L = shaft on left and right side without key way
M = shaft on left side with key way or RediMount, shaft on right side with key way
N = shaft on left side with key way, shaft on right side with key way or RediMount
V = hollow shaft on both sides for Micron DT/DTR planetary gear option
W = hollow shaft on both sides with clamping unit

**7. Carriage configuration**
N = single standard carriage
L = single long carriage
Z = double standard carriages

**8. Distance between double carriages**
0000 = always for single carriages
zzzz = distance in mm

**9. Protection option[2]**
S1 = wash down protection

[1] See below for the definition of shafts.

Left or right with RediMount

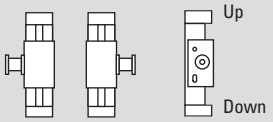


Left or right with RediMount and other side a shaft without RediMount

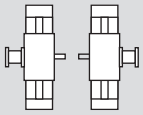

Left, right or both sides with shafts without RediMount

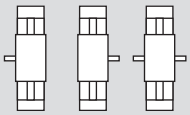

[2] Blank if no additional protection is required.

# Ordering Keys

## Non-driven Linear Motion Systems

### WH40N, WH50N, WH80N, WH120N

| 1 | 2 | 3 | 4 | 5 | 6 | 7 | 8 |
|---|---|---|---|---|---|---|---|
| WH04N00 | SX | XXX | -04500 | -04640 | K | L | 0000 |

**1. Type of unit**
WH04N00 = WH40N unit
WH05N00 = WH50N unit
WH08N00 = WH80N unit
WH12N00 = WH120N unit

**2. Transmission type**
SX = inline style, directly coupled, no RediMount flange

**3. RediMount motor ID code**
XXX = for units without RediMount flange

**4. Maximum stroke (Smax)**
- xxxxx = distance in mm

**5. Total length of unit (L tot)**
- yyyyy = distance in mm

**6. Drive shaft / RediMount flange configuration**
K = no shaft or RediMount flange

**7. Carriage configuration**
N = single standard carriage
L = single long carriage
Z = double standard carriages

**8. Distance between double carriages**
0000 = always for single carriages
zzzz = distance in mm

### WM40N, WM60N, WM80N, WM120N

| 1 | 2 | 3 | 4 | 5 | 6 | 7 | 8 |
|---|---|---|---|---|---|---|---|
| WM08N00 | SX | XXX | -07100 | -07210 | K | N | 0000 |

**1. Type of unit**
WM04N00 = WM40N unit
WM06N00 = WM60N unit
WM08N00 = WM80N unit
WM12N00 = WM120N unit

**2. Transmission type**
SX = inline style, directly coupled, no RediMount flange

**3. RediMount motor ID code**
XXX = for units without RediMount flange

**4. Maximum stroke (Smax)**
- xxxxx = distance in mm

**5. Total length of unit (L tot)**
- yyyyy = distance in mm

**6. Drive shaft / RediMount flange configuration**
K = no shaft or RediMount flange

**7. Carriage configuration[1]**
N = single standard carriage
S = single short carriage
L = single long carriage
Z = double standard carriages
Y = double short carriages

**8. Distance between double carriages**
0000 = always for single carriages
zzzz = distance in mm

| Type of unit | Available carriage types | | | | |
|---|---|---|---|---|---|
| | N | S | L | Z | Y |
| WM04N | x | | x | x | |
| WM06N | x | x | x | x | x |
| WM08N | x | x | x | x | x |
| WM12N | x | | x | x | |

# Ordering Keys

## Non-driven Linear Motion Systems

### M75N, M100N

| 1 | 2 | 3 | 4 | 5 | 6 | 7 | 8 | 9 |
|---|---|---|---|---|---|---|---|---|
| MG10N00 | SX | XXX | -04500 | -04800 | K | N | 0000 | S1 |

**1. Type of unit**
MG07N00 = M75N unit with slide guides
MG10N00 = M100N unit with slide guides
MF07N00 = M75N unit with ball guides
MF10N00 = M100N unit with ball guides

**2. Transmission type**
SX = inline style, directly coupled, no RediMount flange

**3. RediMount motor ID code**
XXX = for units without RediMount flange

**4. Maximum stroke (Smax)**
- xxxxx = distance in mm

**5. Total length of unit (L tot)**
- yyyyy = distance in mm

**6. Drive shaft / RediMount flange configuration**
K = no shaft or RediMount flange

**7. Carriage configuration**
N = single standard carriage
Z = double standard carriages

**8. Distance between double carriages**
0000 = always for single carriages
zzzz = distance in mm

**6. Protection option[1]**
S1 = wash down protection

[1] Leave blank if no protection option required.

# Terminology

## Basic Linear Motion System Terminology

### Screw Driven Unit

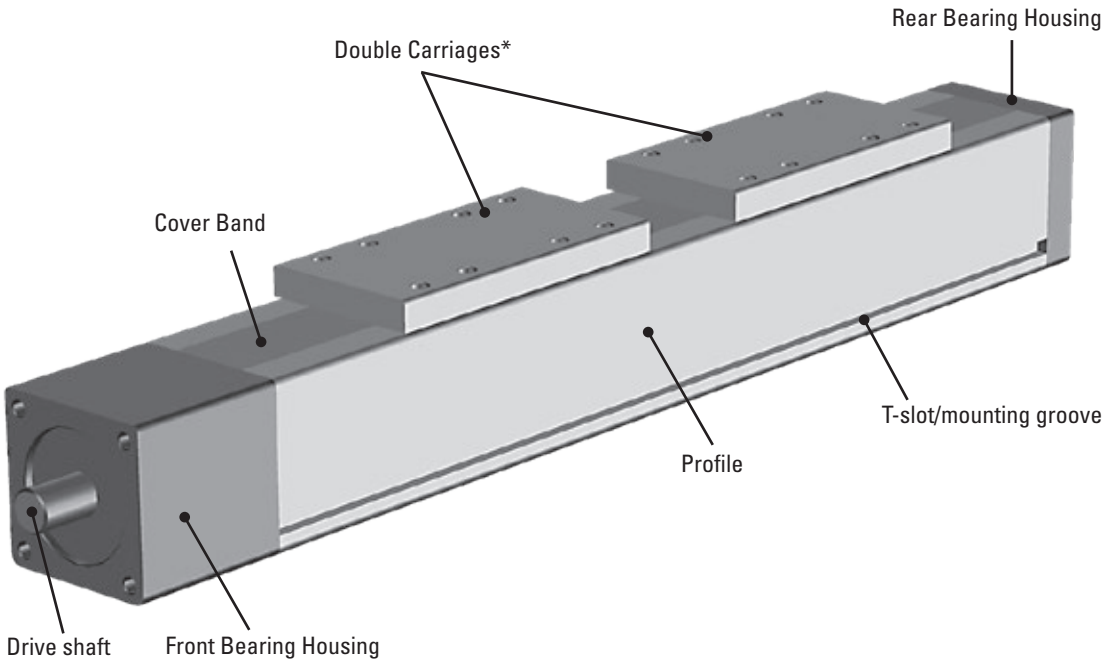


### Belt Driven Unit

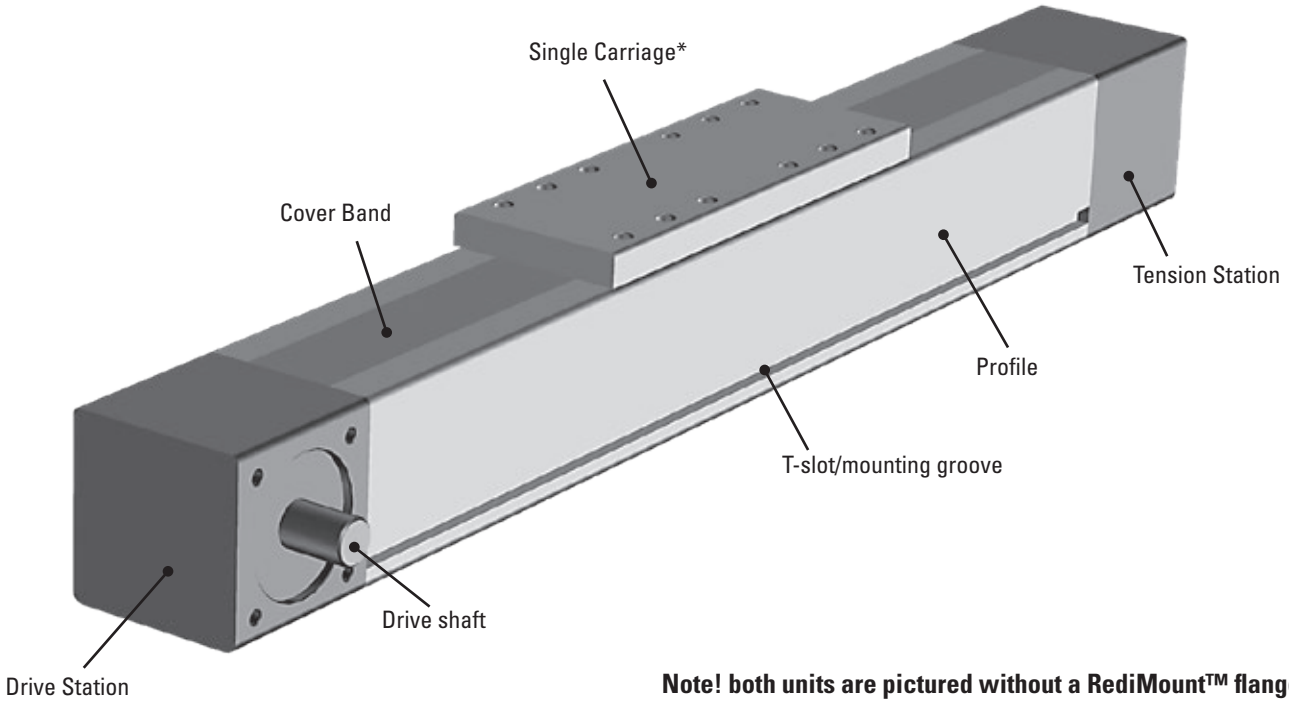


**Note! both units are pictured without a RediMount™ flange**

* Both screw and belt driven units can have single or double carriages.

# Glossary

## A - Belt D

### Acceleration
Acceleration is a measure of the rate of speed change going from standstill (or a lower speed) to a higher speed. Please contact customer service if your application is critical to which acceleration rate is acceptable or needed.

### Accuracy
There are several types of accuracy and many different factors that will affect the overall accuracy of a system. Also see “Repeatability”, “Positioning Accuracy”, “Resolution”, “Lead Accuracy” and “Backlash”.

### Backlash
Backlash is the stack up of tolerances (play) within the leadscrew/belt transmission assembly and gearing which creates a dead band when changing directions. The result is that the motor can rotate some before any motion can be seen on the carriage when reversing the direction of the motor rotation. The backlash varies depending of the liner motion system model.

### Ball Guides
A ball guide consists of a ball rail and a ball bushing. The ball rail is made of hardened steel and runs along the inside of the profile. The ball bushing is attached to the carriage of the unit and contains balls that roll against the rail. The balls in the bushing can be recirculating or have fixed ball positions depending on the type of ball guide. The recirculating type has a longer life and better load capability while the fixed type typically is much smaller. Thomson uses three major types of ball guides in its linear motion systems. Either the compact single rail type with recirculating ball bushing (A), the stronger double rail type also with recirculating ball bushings (B) or the fixed ball position ball bushings type (not shown) which require very little space and are used in the smallest units. Ball guides offer high accuracy, high loads and medium speed.

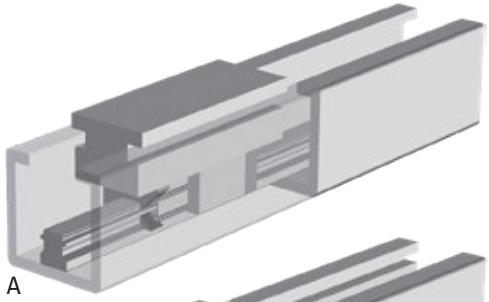

A

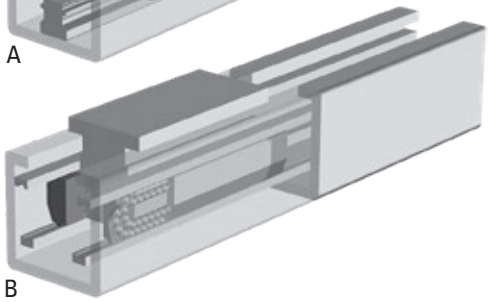

B

### Ball Screw Drive
A ball screw is made up of a rotating screw and a moving ball nut. The ball nut is attached to the carriage of the unit. It does not have a normal thread, instead balls circulate inside the nut making it work as an efficient ball bearing that travels along the screw. Ball screws come in a large variety of leads, diameters and tolerance classes. The tolerance class (T3, T5, T7 or T9) indicates the lead tolerance of the screw. The lower the number, the higher the tolerance. High load capability and high accuracy are typical features of ball screw driven units.

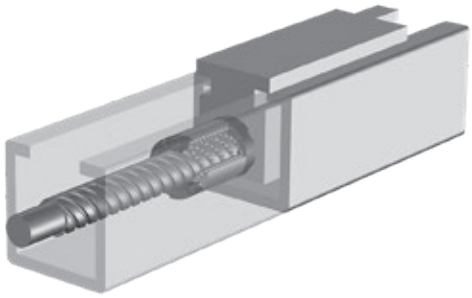

### Bearing Housing
Screw driven units has two bearing housings, front and rear. The front bearing housing has a drive shaft while the rear has none. Sometimes however the rear housing can have an optional output shaft which is used to connect to an encoder.

### Bell House Flange
A bell house flange is used when a motor should be connected directly to the drive shaft of a linear motion system, i.e when it is direct driven. The bell house has the bolt pattern of the motor flange in one end and the bolt pattern of the drive shaft flange in the other while the two shafts are joined by a coupling. Also see “Direct Drive”.

### Belt Drive
A belt drive consists of a toothed belt which is attached to the carriage of the unit. The belt runs between two pulleys positioned at either end of the profile. One pulley is attached to the motor via the drive shaft in the drive station while the other is mounted in a tension station. The belts are made of plastic reinforced with steel cords. High speeds, long stroke, low noise and low overall weight are typical features of belt driven units

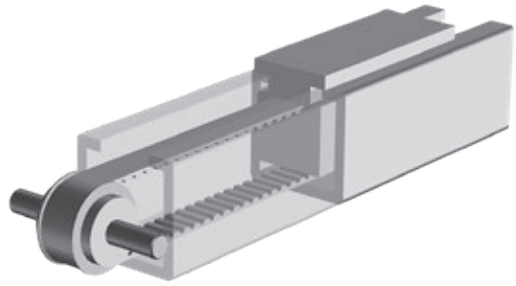

.

# Glossary

## Belt G - C

### Belt Gear
A belt gear consists of a timing belt that runs between two pulley wheels of different diameters. The difference between the diameters determines the gear ratio. Belt gears are quiet, have medium accuracy and require no maintenance but are susceptible to belt breakage under overload conditions.

### Brake
None of the units are equipped with a brake or are self-locking which means that a vertical unit will drop the carriage/load if no external brake (such as a brake in the motor, etc.) is applied to the drive shaft. In the case of belt driven units care must be taken as the carriage/load will drop immediately in the case of a belt breakage. This is particularly important in vertical applications. You also may want to incorporate a brake in to the system to ensure fast and secure stops at an emergency stop or a power failure. In this case the brake should be of the failsafe type, i.e. a brake that is engaged when power is off and lifted when it is on.

### Carriage
The carriage is the moving member which travel along the profile of the unit to which the load is attached. Some units can have multiple carriages in order to distribute the weight of the load over a greater distance, this will however reduce the available stroke for a given profile length. There are also units having the option of short or long carriage. The short can carry less weight than a standard one but has a slightly longer stroke for a given profile length while the longer works the other way around. It is possible to fix the carriage(s) to the foundation and let the profile act as the moving member if so desired. This is often the case in vertical applications where you let the profile lift and lower the load.

### CE Certificate
Linear motion systems do not need and do therefore not have any CE certification. All Thomson linear motion systems are however designed in accordance with the CE regulations and comes with a manufacturers declaration to prove this. Once the linear motion system is used or made in to a machine it is the responsibility of the end customer to make sure the entire machine that the linear motion system is a part of is in accordance with the applicable CE regulations, produce the documents that proves this and apply a CE mark to the machine.

### Cover Band
Cover bands are used on some units to protect them from the ingress of foreign objects through the opening in the profile where the carriage runs and can be made of plastic (A) or stainless steel (B). In the case of plastic the cover band seals the profile by snapping into small grooves running along the carriage opening. In the case of stainless steel the cover band seal the profile magnetically using magnet strips mounted on each side of the carriage opening. Some units also have a self-adjusting cover band tensioning mechanism that eliminates any slack in the cover band that can occur from temperature changes, thus improving the sealing degree and the expected life of the cover band.

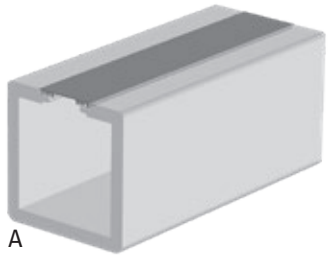

A

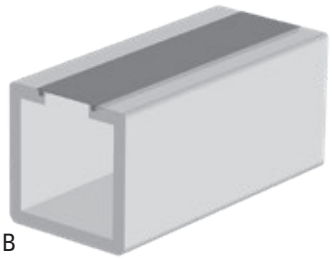

B

### Critical Speed
All ball screws have a critical speed where the screw starts to vibrate and eventually bend or warp the screw. The exact limit is a function of how long the screw is and the speed. For some units this means that the allowed maximum speed found in the performance specifications can be higher than the critical speed when the stroke exceeds a certain distance. In this case, either the speed must be reduced to the critical speed, the amount of stroke must be reduced, or you must use the screw support option if the unit in question allows this. Otherwise you must select another unit that can manage the speed at that stroke. The critical speed limits can be found in the "Critical Speed" diagrams on the product pages of the units that this concern.

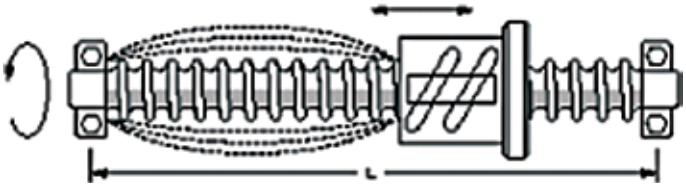


### Customization
Despite the large range of linear motion systems offered by Thomson you may not find the exact unit to suit your application. But whatever your need is, Thomson is ready to help you to customize a unit according to your requirements. Please contact customer service for more information.

### Cycle
One cycle is when the carriage has travelled back and forth over the complete stroke of the unit one time.

# Glossary

## D - E

### Deceleration
Deceleration is a measure of the rate of speed change going from a higher speed to a lower speed (or standstill). Please contact customer service if your application is critical to which deceleration rate is acceptable or needed.

### Definition of Forces
The designations of the forces that acts on the unit are defined on the product page of each unit in the "Definition of Forces" drawing (see example below). Please always use the same definitions whenever communicating with Thomson.

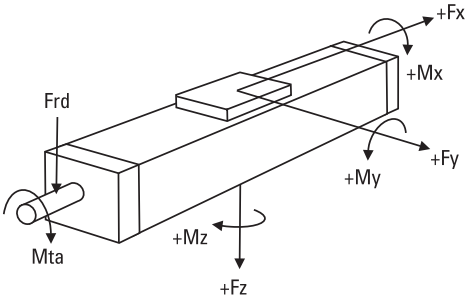


### Deflection of the Profile
Some units require support along the whole profile whilst some are self-supporting over a specified span. Further details can be found on the product data pages. The recommended support intervals should be followed to minimize deflection of the unit. The maximum distance between the support points is shown on the product data pages. The deflection of the unit can also be calculated using the information in the "Additional data and calculations" section.

### Direct Drive
Direct drive means that there is no gearing between the motor and the drive shaft of the linear motion system. Instead the motor is connected to the unit directly via a coupling and a bell house adapter flange. Also see "Bell House Flange".

### Double Ball Nuts
Using double ball nuts will increase the repeatability of the unit. The ball nuts are installed so that they are pre-tensioned against each other eliminating the play between the nuts and the screw. A double nut unit will have a slightly shorter stroke for a given overall length.

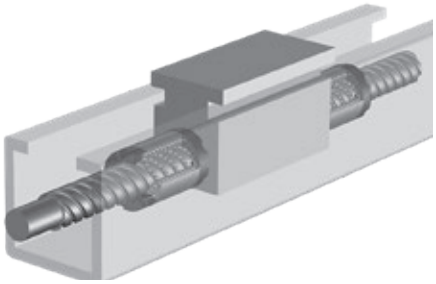

### Double Carriages
Double carriage units have two carriages which gives them higher load capabilities than single carriage units. When ordering a double carriage unit the distance between the two carriages needs to be defined. This distance is called $L_A$ or Lc depending on the model.

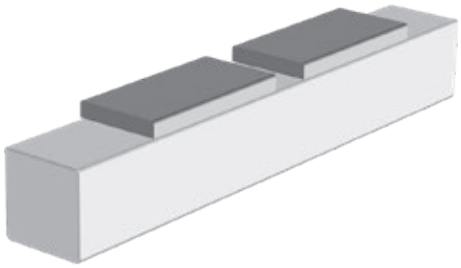

### Drive Shaft
The drive shaft is the is the shaft to which the motor is connected, either directly, via a bell house flange or via a gear box. There are many sizes and types of drive shafts, such as shafts with or without key way or hollow shafts, depending on the type and size of the unit. Belt driven units can often have two drive shafts (same or different type and size), one on each side of the drive station, while screw driven only have on pointing out of the end of the unit. Customized drive shafts are possible, please contact customer service for more information.

### Drive Station
The drive station is the mechanical assembly in one of the ends of a belt driven unit where the drive shaft is situated.

### Duty Cycle
All units are designed for a 100% duty cycle. However, where the unit runs at extreme load, speed, acceleration and temperature or for long operating periods the expected life time may be reduced.

### Encoder Feedback
Encoders provide a digital output signal in the form of a square shaped pulse train that can be used to determine the position of the extension tube. The encoder signal in a servo motor system is connected to the motion control so that it can control the servo drive and hence close the position feedback loop.

### End of Stroke Limit Switches
If a unit runs at speed to the ends of its stroke there is a risk of damage. Damage can be prevented by using end of stroke limit switches to detect and engage a brake and/or cut power to the motor when the unit nears the end of the unit. You must ensure that there is sufficient distance between the end of stroke limit switch and the end of the unit, to allow the carriage to come to a complete stop before colliding with the end. The required stopping distance depends on the speed and the load and will have to be calculated for each application. The stopping distance must be taken into account when defining the necessary stroke.

# Glossary

## G - M

### Guides
Guides are in essence a form of linear bearings on which the carriage(s) travel. Thomson uses three main types of guides that all have different characteristics and which to choose depends on the demands of the application. Also see “Ball Guides”, “Slide Guides” and “Wheel Guides”.

### Idle Torque
Idle torque is the torque needed to move the carriage with no load in it by rotating the drive shaft. The idle torque will vary with the input speed and the idle torque tables on the product pages gives a value for some speeds. The value given in the table is for a unit having a single carriage of standard length. If you need the exact value for another speed, multiple carriages or short/long carriages, please contact our customer service.

### Inertia
Inertia is the property of an object to resist speed changes and is dependent on the shape and the mass of the object. The inertia is important when sizing and selecting and also when tuning a servo system to optimum performance. Consult customer service for more information.

### Input Shaft
The input shaft is the shaft to which the power source (motor) is connected to on a gear box. Primary shaft is another term for this. Sometimes the drive shaft on a linear unit also is referred to as the input shaft.

### Input Speed
Input speed is the rotational speed that the drive shaft/input shaft of a linear motion system or a gear box is subjected to.

### Installation and Service Manual
Each linear motion system has an installation and service manual to answer typical questions about mounting and servicing the unit.

### Lead Accuracy
Lead accuracy is a measure of how accurate the lead of a ball screw is. For a ball screw with a lead of 25 mm, the screw should in theory move the nut 25 mm per each revolution. In reality there will be a deviation between the expected traveling distance and what is actually achieved. The deviation is typically for a ball screw 0,05 mm per 300 mm of stroke. Contact customer service for more information.

### Left/right Moving Carriages
Units with left/right moving carriages have two carriages moving in opposite directions when the drive shaft is rotated. This type of unit has a ball screw where half of the screw has a left hand thread and the other half a right hand thread.

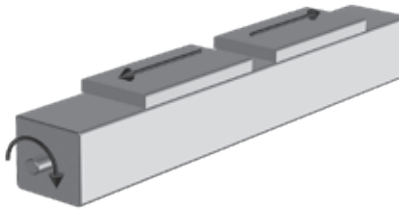

### Lifetime Expectancy
When determining the lifetime for a linear motion system it is necessary to evaluate all forces and moments that are acting on the unit. The data and formulas given in this catalogue serve as a basis for this. For a more detailed lifetime calculation please use our sizing and selection software. Please contact us for further guidance.

### Linear Lifting System
A linear lifting system is in essence a linear motion system specially designed for vertical lifting applications. Some units can be used in horizontal applications as well under certain criteria. Please contact us if you plan to mount a lifting unit in any other position than vertically with the load carrying plate pointing down.

### Linear Motion System
A linear motion system is a mechanical assembly that translates the rotating motion of a motor to the linear motion of a carriage that travel along a load supporting beam/profile. Other names for linear motion systems are linear units, linear drive units and rodless actuators among others.

### Load Rating
There are many types of load ratings that all needs to be considered. Normally when you speak about the load you refer to the load that the carriage will move; which is the dynamic load. But there may also be static, side, moment and forces from acceleration, deceleration, gravity and friction that are all equally important. For some units the load and load torque values are given for both the complete unit and the guiding system. The values for the complete unit are the values under which the unit can operate. The values for the guiding system should only be used when comparing different units and do not describe the actual performance of the complete unit.

### Maintenance
Most units require lubrication. General lubrication requirements can be found in the general specifications table on the product data pages. The lubrication intervals, grease qualities and specific lubrication instructions can be found in the installation and service manual of each unit. No other regular maintenance is needed except for normal cleaning and inspection. Units with a cover band may also require irregular cover band replacement due to wear. The belt in belt driven units should not require re-tensioning under normal operating conditions.

### Manufacturers Declaration
All Thomson linear motion systems comes with a manufacturers declaration to prove that it is built according to the CE regulations.

### Mounting
Most units can be mounted in any direction. Any restrictions on mounting positions are shown on the product presentation pages at the beginning of each product category chapter. Even where units may be mounted in any direction there are some considerations. None of the units are self-locking which means that a vertical unit will drop the carriage/load if no

# Glossary

## N - Sc

external brake (such as a brake in the motor, etc.) is applied to the drive shaft of the unit. In the case of belt driven units care must be taken as the carriage/load will drop immediately in the case of a belt breakage. This is particularly important in vertical applications. All ball screw driven units are equipped with a safety nut to prevent the carriage/load being released in case of ball breakage.

### Non-driven Linear Motion Systems

A non-driven linear motion system has no drive shaft or any type of transmission. In reality a non-driven linear motion system is a guide that has the same look and outer dimensions as the driven version. Normally a non-driven unit is used together with a parallel working driven unit that are mechanically linked where the non-driven unit help to share to load with the driven one.

### Non-guided Linear Motion Systems

A non-guided linear motion system has a drive shaft and a ball screw but no guides. In reality a non-guided linear motion system is a enclosed ball screw assembly with a carriage that has the same look and outer dimensions as the driven version. Using a non-guided unit requires some kind of external guide to which the carriage can be attached.

### Operation and Storage Temperature

Operational temperature limits can be found in the performance tables on the product data pages. Units can be stored or transported within the same temperature range. Please contact us if the unit will be exposed to higher/lower temperatures than recommended during storage or transportation.

### Output Shaft

The output shaft is the shaft on a gear box that is connected to object being driven by the gear box. Another term for output shaft is secondary shaft.

### Packages and Multi Axis Kits

Thomson can offer complete pre-defined packages (linear motion system, gear and servo motor assembled and shipped with servo drive and cables) as well as mounting kits for the creation of two and three axis systems. Please contact us for further information.

### Positioning Accuracy

Positioning accuracy is the error between the the expected and actual position and is the sum of all factors that will reduce the accuracy (i.e. repeatability, backlash, resolution, screw/belt accuracy, and the accuracy of the motor, drive and motion control system). Some of these factors, such as backlash and lead accuracy, can sometimes be compensated for in the software of the motion control system being used. Also see “Accuracy”.

### Position Feedback

The position of the carriage/rod/lifting profile can be obtained in many ways. The most common way is to equip the unit with an encoder or to use a motor which has a built in feedback device (encoder, resolver, etc.). To many units there are encoders or/and encoder mounting kits available. See the accessory chapter.

### Repeatability

Repeatability is the ability for a positioning system to return to a location when approaching from the same distance, at the same speed and deceleration rate. Some of the factors that affect the repeatability are the angular repeatability of the motor, drive and motion control system, system friction and changes in load, speed and deceleration.

### Resolution

Resolution is the smallest move increment that the system can perform. Some of the factors that affect the resolution are the angular repeatability of the motor, drive and motion control system, system friction, the drive train reduction, the lead/type of the ball screw/belt and changes in load, speed and deceleration.

### Resolver

A resolver is basically a type of rotary electrical transformer used for measuring degrees of rotation and are commonly used on AC servo motors as a feedback device to control the commutation of the motor windings. The resolver is mounted to the end of motor shaft and when the motor rotates the resolver will transmit the position and direction of the rotor to the servo drive which then can control the motor. Most servo drives for AC servo motors on the market today can convert the resolver signal in to a pulse train (encoder signal simulation) which can be used by a motion control to determine and control the position of the motor. Also see “Encoder Feedback”.

### RoHS Compliance

The RoHS directive stands for “the restriction of the use of certain hazardous substances in electrical and electronic equipment”. This directive bans the placing on the EU market of new electrical and electronic equipment containing more than agreed levels of lead, cadmium, mercury, hexavalent chromium, polybrominated biphenyl (PBB) and polybrominated diphenyl ether (PBDE) flame retardants. All linear motion systems and accessories sold in the EU are RoHS compliant.

### Screw Supports

Screw supports allow screw driven units to travel at high speed even when stroke becomes longer. The supports reduce the unsupported length of the screw, that otherwise would be subjected to vibrations. Screw supports come in single (one screw support on each side of the carriage) or double (two supports on each side) versions. Screw support units will have a slightly shorter stroke for a given overall length.

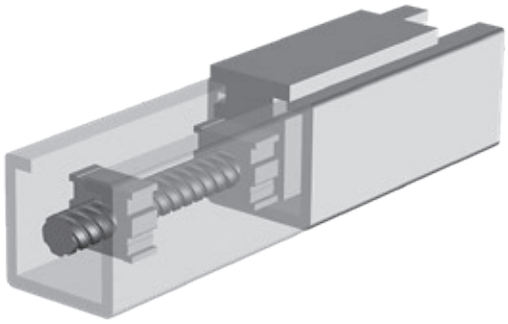

# Glossary

## Si - W

### Single Carriage

Single carriage units have one carriage. Some linear motion system models also have the option of long or short single carriages. The long carriages handle higher loads but will have a longer overall length for a given stroke.

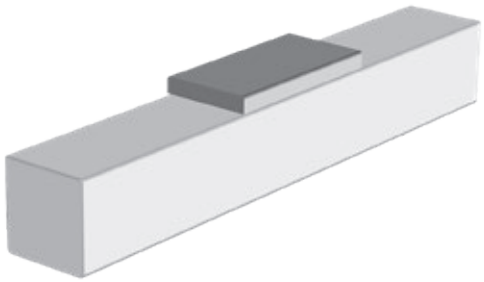

### Sizing and Selection

This catalog can give you an overview of what Thomson can offer you and an indication of which products that may suit your application. But in order to get the best solution it is necessary to know your specific application and to carry out detailed sizing and selection calculations. Please contact customer service for further help.

### Slide Guides

A slide guide consists of a guide attached to the inside of the profile and a slide bushing attached to the carriage. The guide can be made of different materials (e.g. polished hardened steel, anodized aluminum) while the bushing is made of a polymer material. There are two types of bushings, fixed and prism. Prism bushings can move in relation to the guide which results in longer life and higher load capabilities. Slide bushings are silent, simple, reliable and robust and can be used in dirty and dusty environments. They are also resistant to shock loads, have a long life expectancy and require little or no maintenance.

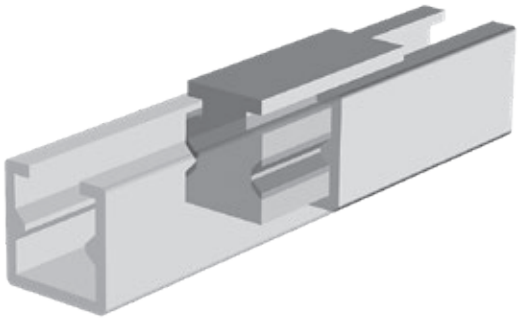

### Stroke

The theoretical maximum stroke (Smax) is the length that the carriage can travel from one end of the unit to the other. However, using the maximum stroke means that the carriage will collide with the ends of the profile. The practical stroke is therefore shorter. We recommend that you specify a unit that have at least 100 mm longer stroke than the maximum stroke you need so that the unit can stop before colliding with the ends and also allow for some adjustment of the unit postition at the mounting.

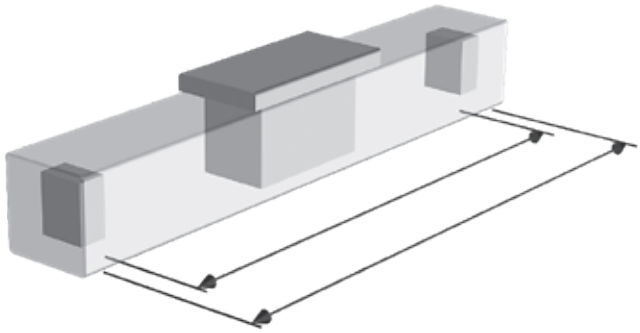

### Tension Station

The tension station is the mechanical assembly situated in the opposite end of the drive station on a belt driven unit. The tension station has a mechanism that allows the belt pulley position to be adjusted thus changing the tension of the belt. Adjustment of the belt tension is normally only necessary when replacing a broken or worn out belt with a new.

### Wheel Guides

A wheel guide consists of ball bearing wheels that run on a hardened steel rail. Wheel guides are a simple and robust guiding method offering high speeds, high loads and medium accuracy.

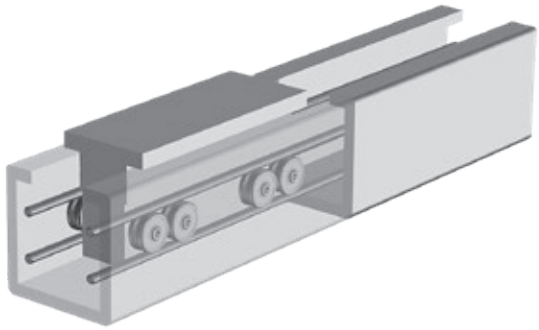

### Working Environment

All units are designed for use in normal industrial environments. Units which have an open profile (i.e. have no cover band) are more sensitive to dust, dirt and fluids. These units require some kind of cover if they are used in environments where dust, dirt or fluids are present. Wash down or enhanced wash down protection can be ordered for our closed profile units. Please refer to the accessory pages. In all cases where a unit will be exposed to aggressive chemicals, heavy vibrations or other potentially harmful processes we recommend that you contact us for further advice.

## USA, CANADA and MEXICO

Thomson
203A West Rock Road
Radford, VA 24141, USA
Phone: 1-540-633-3549
Fax: 1-540-633-0294
E-mail: thomson@regalrexnord.com
Literature: literature.thomsonlinear.com

## EUROPE

**United Kingdom**
Thomson
Office 9, The Barns
Caddsdown Business Park
Bideford, Devon, EX39 3BT
Phone: +44 1271 334 500
E-mail: thomson.europe@regalrexnord.com

**Germany**
Thomson
Nürtinger Straße 70
72649 Wolfschlugen
Phone: +49 7022 504 403
Fax: +49 7022 504 405
E-mail: thomson.europe@regalrexnord.com

**France**
Thomson
Phone: +33 243 50 03 30
E-mail: thomson.europe@regalrexnord.com

**Italy**
Thomson
Via per Cinisello 95/97
20834 Nova Milanese (MB)
Phone: +39 0362 366406
Fax: +39 0362 276790
E-mail: thomson.italy@regalrexnord.com

**Sweden**
Thomson
Bredbandsvägen 12
29162 Kristianstad
Phone: +46 44 590 2400
Fax: +46 44 590 2585
E-mail: thomson.europe@regalrexnord.com

## ASIA

**Asia Pacific**
Thomson
E-mail: thomson.apac@regalrexnord.com

**China**
Thomson
Rm 805, Scitech Tower
22 Jianguomen Wai Street
Beijing 100004
Phone: +86 400 606 1805
Fax: +86 10 6515 0263
E-mail: thomson.china@regalrexnord.com

**India**
Kollmorgen – Div. of Altra Industrial Motion
India Private Limited
Unit no. 304, Pride Gateway, Opp. D-Mart,
Baner Road, Pune, 411045
Maharashtra
Phone: +91 20 67349500
E-mail: thomson.india@regalrexnord.com

**South Korea**
Thomson
3033 ASEM Tower (Samsung-dong)
517 Yeongdong-daero
Gangnam-gu, Seoul, South Korea (06164)
Phone: + 82 2 6001 3223 & 3244
E-mail: thomson.korea@regalrexnord.com

## SOUTH AMERICA

**Brazil**
Thomson
Av. João Paulo Ablas, 2970
Jardim da Glória - Cotia SP - CEP: 06711-250
Phone: +55 11 4615 6300
E-mail: thomson.brasil@regalrexnord.com


www.thomsonlinear.com

Linear_Motion_Systems_CTEN-0008-06 | 20231220SK


THOMSON®
Linear Motion. **Optimized.**™
A REGAL REXNORD BRAND